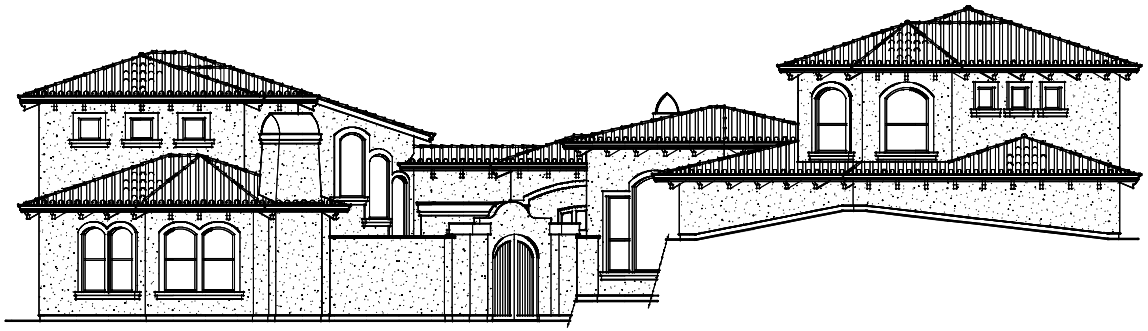

SKYFARM SUBDIVISION, LOT 42
SANTA ROSA, CALIFORNIA

FIRE CODE REQ'S

ILLUMINATED ADDRESS SIGN REQUIREMENTS:
(AS STATED IN CITY OF SANTA ROSA FIRE DEPT. BULLETIN PP-91-015, 1B
ILLUSTRATION)
LIGHT SOURCES USED TO COMPLY W/ THIS SECTION SHALL BE CONTROLLED BY PHOTOELECTRIC DEVICE OR BY A CIRCUIT SUPPLIED BY A NOISE METER SWITCH IS USED TO PROVIDE OTHER REQUIRED LIGHTING DURING HOURS OF DARKNESS. NO SWITCH OR OTHER SIMILAR DEVICE SHALL BE INSTALLED.

LOCATION:
THE ADDRESS SHALL BE AT A HEIGHT AND LOCATION THAT ENSURES THE ADDRESS IS CLEARLY VISIBLE AND LEGIBLE TO EMERGENCY VEHICLES APPROACHING FROM EITHER DIRECTION ALONG THE STREET OR ROAD FRONTING THE PROPERTY.

OTHER CRITERIA:
THE NUMBERS SHALL BE A MINIMUM 4 INCHES IN SIZE AND COLORS OF NUMBERS SHALL CONTRAST THE BUILDING BACKGROUND COLOR.

FIRE HYDRANT REQUIREMENTS:

WATER SUPPLY:
ADEQUATE WATER SUPPLY IS REQUIRED PER § 903.2.
(THE REQUIRED FIRE FLOW IS 2,500 GPM @ 20 LBS/SQ. INCH RESIDUAL PRESSURE W/ HYDRANT FLOW
CONTACT THE CITY OF SANTA ROSA WATER DEPARTMENT OR THE CITY OF SANTA ROSA FIRE DEPARTMENT.)

HYDRANT LOCATION:
FIRE HYDRANT REQUIREMENT PER 903.3. ON-SITE HYDRANT. (FIRE HYDRANT REQUIREMENT STATUS BASED NOW REQUIRED. PLEASE VERIFY W/ CIVIL DRAWINGS THAT THIS PROJECT IS IN COMPLIANCE. IF PROJECT DOES NOT COMPLY W/ ABOVE STATED REQUIREMENT, APPLICANT SHALL SUBMIT FORM PS-103-223 FOR APPLICATION FOR ACCEPTANCE OF ALTERNATE MATERIALS OR METHODS TO THE CITY OF SANTA ROSA FIRE DEPARTMENT.

PROJECT DATA

PROJECT DESCRIPTION:
SFR: 4 BEDROOM, 5 BATH, 2 1/2 BATH
3-CAR GARAGE

ZONING:
EXISTING: R-7, PROPOSED: NO CHANGE

OCCUPANCY GROUP:
R-3/U-1

TYPE OF CONSTRUCTION:
V-N

ASSESSORS PARCEL NUMBER:
173-150-062

AREA CALC'S:

MAIN FLOOR LIVING AREA :	1,812 SQ. FT.
UPPER FLOOR LIVING AREA :	2,142 SQ. FT.
LOWER FLOOR LIVING AREA :	2,301 SQ. FT.
TOTAL LIVING AREA	6,255 SQ. FT.

GARAGE AREA : 1,148 SQ. FT.
COVERED LOGGIA AREA : 1,114 SQ. FT.

COLOR SCHEME

ROOF : MCA CLAY TILE
B334 RUSTIC IVORY BLEND

STUCCO FINISH: CARBONS COATINGS
220 ALMOND

TRIM: CDI
BC

WINDOWS: BRONZE VINYL

OWNER

MTA CONSTRUCTION
P.O. BOX 1551
SANTA ROSA, CA 95406

ARCHITECT of RECORD

FARRELL-FABER & ASSOCIATES, INC.
1022 MENDOCINO AVENUE
SANTA ROSA, CA 95401
(707) 579-3811

GENERAL CONTRACTOR

MTA CONSTRUCTION
P.O. BOX 1551
SANTA ROSA, CA 95406
(707) 953-4353

DEFERRED SUBMITTALS

LETTERS REQUESTING DEFERRALS FOR THE FOLLOWING ITEMS SHALL BE INCLUDED WITH SUBMITTAL PACKAGE TO THE CITY OF SANTA ROSA BUILDING DIVISION:
* TRUSS DESIGNS AND CALCULATIONS

*THE DEFERRED SUBMITTAL ITEMS SHALL NOT BE INSTALLED PRIOR TO APPROVAL FROM THE BUILDING OFFICIAL (CBC 106.3.4.3)

CONSULTANTS

CIVIL ENGINEER
MTA CONSTRUCTION
P.O. BOX 1551
SANTA ROSA, CA 95406

GEOTECHNICAL ENGINEER
GIBLIN ASSOCIATES
P.O. BOX 4172
SANTA ROSA, CA 95406
(707) 528-3018

STRUCTURAL ENGINEER
JOHNSON, DeBOIS & FORREST
405 WEST COLLEGE AVE., STE. E102
SANTA ROSA, CA 95401
(707) 575-0411

TITLE 24 COMPLIANCE
ENERGY COMPLIANCE SOURCE
1022 MENDOCINO AVENUE
SANTA ROSA, CA 95401
(707) 579-3811

CODE ANALYSIS

CALIFORNIA BUILDING CODE, 2001
CALIFORNIA PLUMBING CODE, 2001
CALIFORNIA MECHANICAL CODE, 2001
NATIONAL ELECTRICAL CODE, 2001

SHEET INDEX

ARCHITECT'S DRAWINGS	
CS	COVER SHEET
1	FRONT ELEVATIONS
2	ELEVATIONS & ROOF PLAN
3	MAIN FLOOR PLAN
4	MAIN FLOOR PLAN - GARAGE
5	UPPER FLOOR PLAN
6	LOWER FLOOR PLAN
7	MAIN FLOOR ELECTRICAL/MECH PLAN
8	MAIN FLOOR - GARAGE ELECTRICAL/MECH PLAN
9	UPPER FLOOR ELECTRICAL/MECH PLAN
10	LOWER FLOOR ELECTRICAL/MECH PLAN
11	SECTIONS/VENT CALC'S/INTERIOR ELEVATIONS
D1	ARCHITECTURAL DETAILS
D2	ARCHITECTURAL DETAILS
E	TITLE 24 COMPLIANCE SHEET
STRUCTURAL ENGINEER'S DRAWINGS	
SN	STANDARD STRUCTURAL NOTES & DETAILS
S1.1	FOUNDATION PLAN
S1.2	FOUNDATION PLAN
S1.3	MAIN FLOOR FRAMING PLAN
S1.4	UPPER FLOOR FRAMING PLAN
S1.5	ROOF FRAMING PLAN
S1.6	ROOF FRAMING PLAN

S1	STANDARD STRUCTURAL DETAILS
S2	STRUCTURAL DETAILS
S3	STRUCTURAL DETAILS
S4	STRUCTURAL DETAILS
S5	STRUCTURAL DETAILS
CIVIL ENGINEER'S DRAWINGS	
C1	SITE IMPROVEMENT PLAN

DATE 2/03
DRAWN BY:
CHECKED BY:
REVISIONS: DATE:
01-2-09

FARRELL-FABER & ASSOCIATES INC.
ARCHITECTURE - PLANNING
1022 Mendocino Avenue
Santa Rosa California 95401
TEL: 707.579.3811
FAX: 707.579.3848
www.farrellfaber.com

MTA CONSTRUCTION
SKYFARM SUBDIVISION, LOT 42
3171 SKYFARM DRIVE
SANTA ROSA, CALIFORNIA

JOB NO 03037
SHEET CS

H:\2003\03037\CD\03037CS.DWG 4-8-2003 4:26 PM

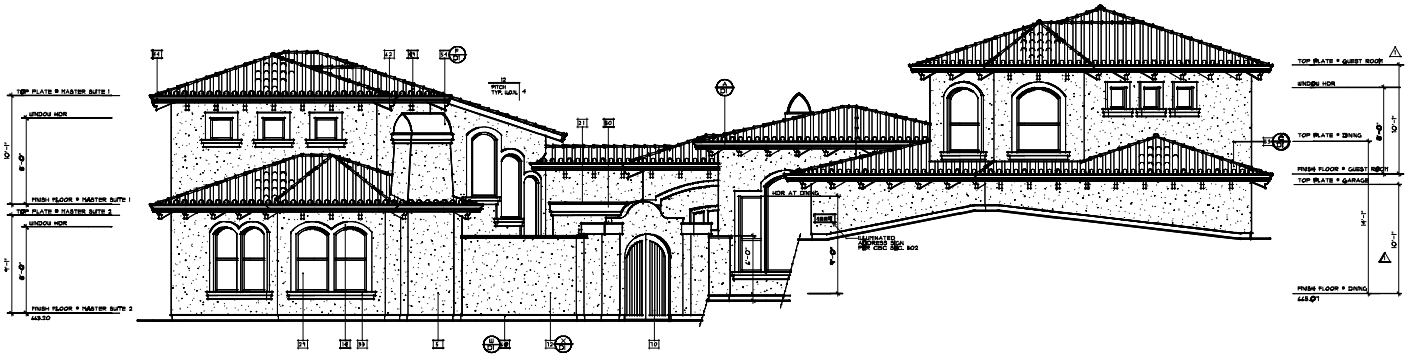

NORTHEAST ELEVATION

SCALE: 1/4" = 1'-0"

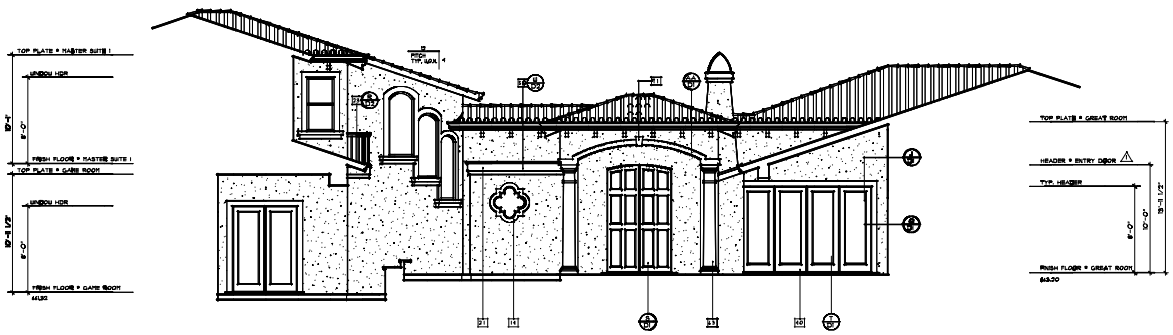

NORTHEAST COURTYARD ELEVATION

SCALE: 1/4" = 1'-0"

ELEVATION NOTES

5. STUCCO EXTERIOR: MIN. 7/8" (3 COATS OF STL. LATH & (2) LAYERS OF GRADE D BUILDING PAPER OVER STRUCTURAL SHEATHING PER SHEAR WALL SCHEDULE T.4/S1 U.O.N. PROVIDE 26 GA. G.S.N. KEEP SCREED PER DETAIL
14. PRE-CAST CONCRETE DOOR & WINDOW TRIMS.
15. PRE-CAST CONCRETE HORIZONTAL TRIM.
19. PRE-CAST CONCRETE MOLDING AT HOT TUBS.
20. PRE-CAST CONCRETE HEADER TRIM.
21. PRE-CAST CONCRETE MOLDING AT PARAPET WALL.
22. PRE-CAST CONCRETE WALL CAP @ LOGGIA.
23. WROUGHT IRON RAILING. SEE DETAIL
24. WOOD SECTIONAL GARAGE DOOR.
29. VINYL PRAIRE WINDOWS.
39. PRE-CAST CONCRETE WINDOW SILL.
40. TILE PORCH.
43. 2 X 8 BARGE RAFTER.
44. G&M "GREEN" GUTTER OVER 2 X 6 FASCIA BOARD.
49. CONCRETE MISSION "S" TILE ROOF CLASS "A" RATED TILES.
50. PARAPET WITH BUILT-UP COMPOSITION ROOF. HOT MOPPED WATERPROOFED MEMBRANE. SLOPE TO DRAIN.
52. 26 GA G&M FLASHING @ VALLEYS.
53. 24 GA G&M FLASHING WALLS ABOVE ROOF.
54. GAS VENT INSTALLATION BLUE BOOK REPER TO MFRS. GAS GAS VENT INSTALLATION. VENT HEIGHT ABOVE ROOF. PROVIDE STORM COLLAR & FLASHING PER MFR. SPECS.
56. ROOF DRAIN AND OVERFLOW. CONNECT TO CLOSED CONDUITS AT DOWNSPOUT DRAIN SYSTEM.
57. 2" X 5" G&M DOWNSPOUT TYP. CONNECT ALL DOWNSPOUTS TO CLOSED CONDUITS DISCHARGING @ EROSION RESISTANT AREA AWAY FROM STRUCTURE.
58. 24 GA G&M CRICKET.
59. LINE OF WALLS BELOW
60. PROVIDE STUCCO MESH. SCREED NOT LESS THAN 4" FROM GRADE.
62. DECORATIVE WOOD CORBEL.
63. DECORATIVE PRE-CAST CONCRETE COLUMN.
70. DECORATIVE WOOD GATE.
71. DECORATIVE PRE-CAST CONCRETE KEYSTONE.
72. GARDEN WALL.

NOTE: ALL EXTERIOR TRIM TO BE PRE-CAST CONCRETE

NOTE: DIVERT PLUMBING VENTS TO BACK SIDE OF RIDGE WHENEVER POSSIBLE.

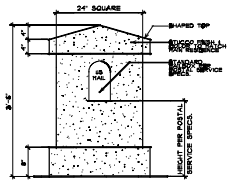

MAIL BOX

SCALE: 1" = 1'-0"

DATE: 2/03

DRAWN BY:
CHECKED BY:

REVISIONS:	DATE:
1	04-2-03
2	
3	
4	
5	
6	

NOTES

FARRELL-FABER & ASSOCIATES INC.
Architecture • Planning
1022 Mendocino Avenue
Santa Rosa, California 95401
TEL: 707.576.7660
FAX: 707.576.7648
www.farrellfaber.com

JOB NO. DESIGN FOR:

MTA CONSTRUCTION
SKYFARM SUBDIVISION, LOT 42
3711 SKYFARM DRIVE
SANTA ROSA, CALIFORNIA

03037

SHEET 1

H:\2003\03037\ADMISOL.DCS 4-8-2003 4:04 PM

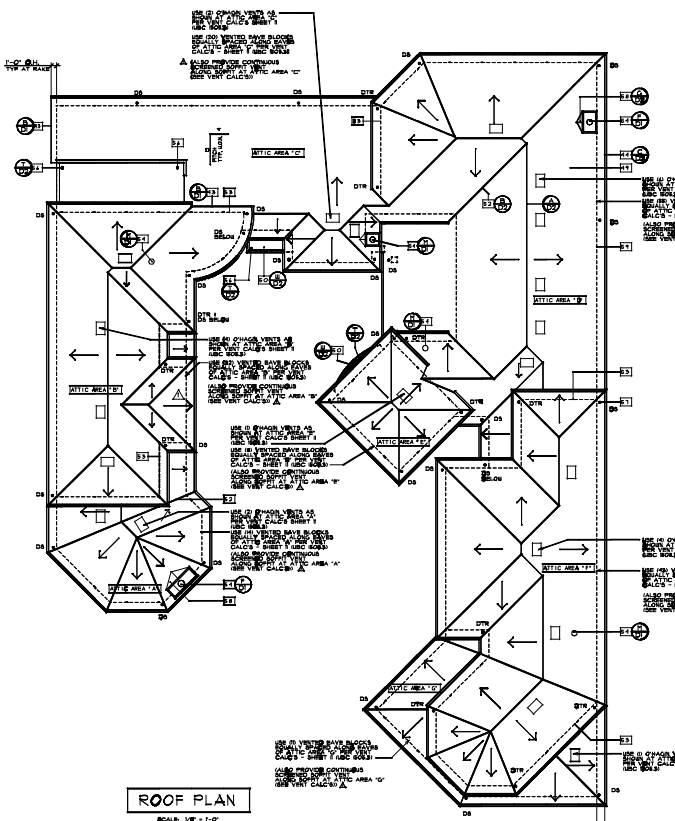

ROOF PLAN

SCALE: 1/8" = 1'-0"

ELEVATION NOTES

8. STUCCO EXTERIOR, MIN. 7/8" W/(3) COATS O/ MTL. LATH & 1 (2) LAYERS OF GRADE D BUILDING PAPER OVER STRUCTURAL SHEATHING PER SHEAR WALL SCHEDULE 1/S-2 OVER 2 X 6 S.N. PROVIDE 24 GA. G.S.N. WEEP SCREED PER DETAIL.
14. PRE-CAST CONCRETE DOOR & WINDOW TRIMS.
15. PRE-CAST CONCRETE HORIZONTAL TRIM.
19. PRE-CAST CONCRETE MOLDING AT HOT TUBS.
20. PRE-CAST CONCRETE HEADER TRIM.
21. PRE-CAST CONCRETE MOLDING AT PARAPET WALL.
22. PRE-CAST CONCRETE WALL CAP & LOGGIA.
23. WROUGHT IRON RAILING, SEE DETAIL
25. WOOD SECTIONAL GARAGE DOOR.
27. VINYL FRAME WINDOWS.
30. PRE-CAST CONCRETE WINDOW SILL.
33. TILE ROOF.
47. 24 GA GSR GUTTER.
48. 6OR "OGEE" GUTTER OVER 2 X 8 FASCIA BOARD.
49. CONCRETE RIBBON "S" TILE ROOF CLASS "A" RATED TILES.
50. PARAPET WITH BUILT-UP COMPOSITION ROOF. HOT MOPPED WATERPROOFED REGRADE. SLOPE TO DRAIN.
52. 24 GA GSR FLASHING @ VALLEYS.
53. 24 GA GSR FLASHING @ WALLS ABOVE ROOF.
54. GAS VENT TERMINATION PLUS 4 CAP. REFER TO MFRS. GAS VENT TERMINATION TABLE FOR VENT HEIGHT ABOVE ROOF. PROVIDE STORM COLLAR & FLASHING PER MFR. SPECS.
56. ROOF DRAIN AND OVERFLOW. CONNECT TO CLOSED CONDUITS AT DOWNSPOUT DRAIN SYSTEM.
57. 24 GA GSR DOWNSPOUT. CONNECT ALL DOWNSPOUTS TO CLOSED CONDUITS TERMINATING @ EROSION RESISTANT AREA AWAY FROM STRUCTURE.
58. 24 GA GSR CRICKET.
59. LINE OF WALLS BELOW.
60. PROVIDE STUCCO WEEP SCREED NOT LESS THAN 4" FROM GRADE.
62. DECORATIVE WOOD CORBEL.
63. DECORATIVE PRE-CAST CONCRETE COLUMN.
69. DECORATIVE WOOD GATE.
71. DECORATIVE PRE-CAST CONCRETE KEYSTONE.
72. GARDEN WALL.

NOTE: ALL EXTERIOR TRIM TO BE PRE-CAST CONCRETE

NOTE: DIVERT PLUMBING VENTS TO BACK SIDE OF RIDGE WHEREVER POSSIBLE.

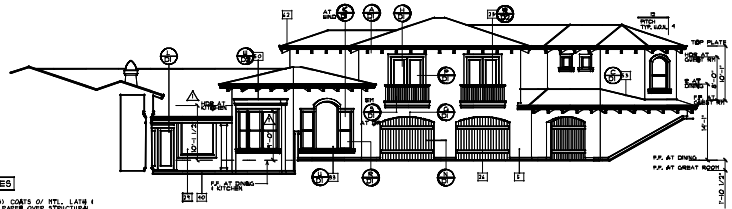

SOUTHEAST COURTYARD ELEVATION

SCALE: 1/8" = 1'-0"

NORTHWEST COURTYARD ELEVATION

SCALE: 1/8" = 1'-0"

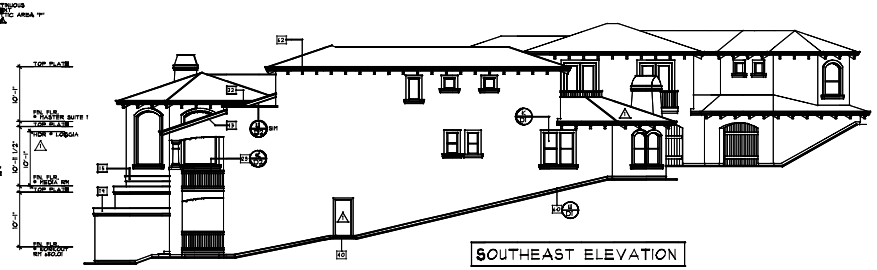

SOUTHEAST ELEVATION

SCALE: 1/8" = 1'-0"

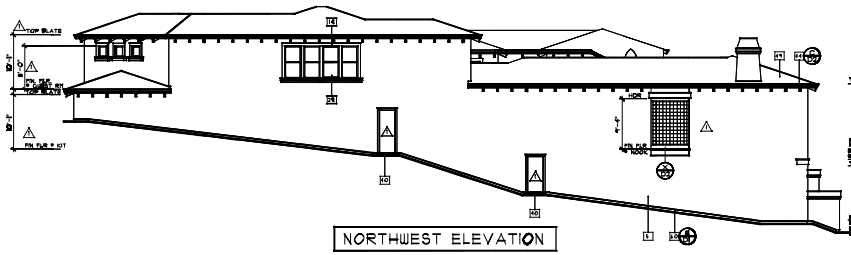

NORTHWEST ELEVATION

SCALE: 1/8" = 1'-0"

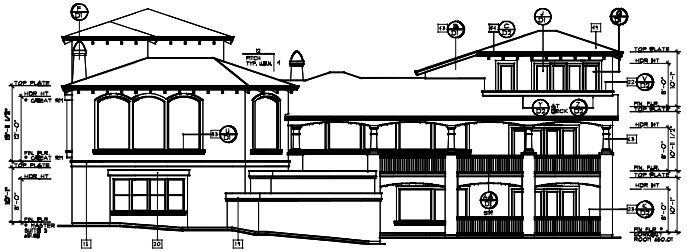

SOUTHWEST ELEVATION

SCALE: 1/8" = 1'-0"

DATE 2/03

DRAWN BY:
CHECKED BY:

REVISIONS:	DATE:
	09-12-03

NOTES

FARRELL-FABER & ASSOCIATES INC.
Architecture - Planning
1032 Mendocino Avenue
Santa Rosa California 95401
PH: 707 579 9040
FAX: 707 579 9048
www.farrellfaber.com

DESIGN FOR

MTA CONSTRUCTION

SKYFARM SUBDIVISION, LOT 12
3777 SKYFARM DRIVE
SANTA ROSA, CALIFORNIA

JOB NO 03037

SHEET 2

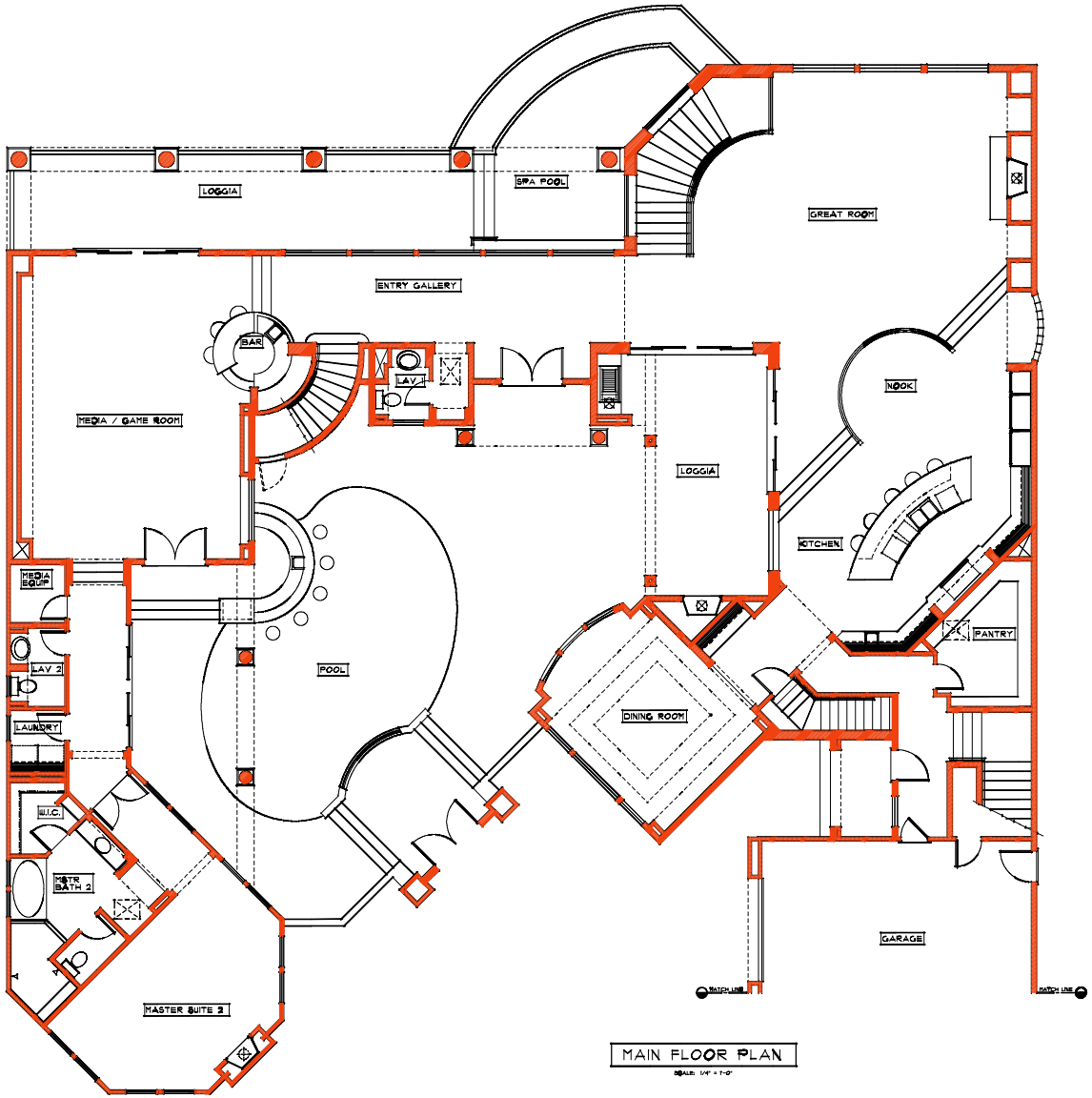

MAIN FLOOR PLAN

SCALE: 1/4" = 1'-0"

FLOOR PLAN NOTES

1. PANTRY - 4 SHELVES.
2. PROVIDE 42" BUILT-IN REFRIGERATOR AND PLUMBING FOR ICE MAKER IN RECESSED BALL BOX.
3. DOUBLE KITCHEN SINK W/GARBAGE DISPOSAL.
4. PROVIDE VENT HOOD AS NECESSARY PER CPC 904.0 (VERIFY WITH MFR.)
5. COMMERCIAL GRADE RANGE/OVEN W/METAL HOOD, LIGHT & FAN VENT TO EXTERIOR AND PROVIDE BACKDRAFT DAMPER. (VERIFY DIMS W/MFR.)
6. BUILT-IN WALL OVEN/MICROWAVE. (VERIFY VENTILATION AND DIMS W/MFR.)
7. BUILT-IN DISHWASHER. (VERIFY DIMENSIONS W/MFR.)
8. BUILT-IN TRASH COMPACTOR. (VERIFY DIMENSIONS W/MFR.)
9. LINE OF CABINETS ABOVE.
10. KITCHEN ISLAND COUNTER TOP. (SEE PLAN FOR DIMS.)
12. VEGETABLE SINK W/GARBAGE DISPOSAL.
14. STAINLESS STEEL PANTY SINK. VERIFY DIMS. W/MFR.
14. TILE SHOWER ENCLOSURE W/18" BENCHSEAT (TILE SHALL COMPLY BY SECTION 412.0 OF THE CALIF. PLUMBING CODE.)
19. 42" DIA. ACRYLIC TUB OR TILE SHOWER BENCH. PROVIDE 42-PIECE ACRYLIC TUB OR TILE SHOWER BENCH. PROVIDE COMPLETE SHOWER SYSTEM (TOEQUAL OR BETTER) ALL & (APPR) APPROVED. VERIFY MFR. & MODELS W/OWNER.
20. 20" HIGH CERAMIC TILE SEAT/PLATFORM.
22. TEMPERED GLASS ENCLOSURE
24. MEDICINE CABINET.
25. BASE CABINET.
26. BUTLER'S PANTRY (UPPER AND LOWER CABINETS).
27. LINEN 4 SHELVES.
28. WASHER SPACE. PROVIDE HOT & COLD WATER AND WASTE. PROVIDE PAN & 3/4" DRAIN AT SECOND FLOOR INSTALLATIONS.
29. DRYER SPACE. PROVIDE 4" DIA. SMOOTH BALLED VENT THRU CLOSET WITH VENT TRIM & DRYER VENT. (VENT SHALL COMPLY WITH MFR'S. SPECS. AND SECTIONS 504.4 & 504.5 OF THE CRC.)
30. WASHER / DRYER COMBO -PROVIDE HOT & COLD WATER AND WASTE. PROVIDE PAN & 3/4" DRAIN AT SECOND FLOOR INSTALLATIONS. PROVIDE 4" DIA. SMOOTHED BALLED VENT THRU FLOOR. PROVIDE WALL TRIM & DRYER VENT. (VENT SHALL COMPLY WITH MFR'S. SPECS. AND SECTIONS 504.4 & 504.5 OF THE CRC.)
31. PEDESTAL SINK.
33. WATER HEATER ON 18" HIGH WOOD PLATFORM. INSTALL PRESSURE RELIEF VALVE W/VENT, AND DRAIN TO OUTSIDE (COMPLY WITH CHAPTER 5 OF THE CALIF. MECHANICAL CODE & SECTION 4.08.3 OF THE CGBC.) (REFER TO ENERGY COMPLIANCE REPORT).
34. FAN ON 18" HIGH PLATFORM. (INSTALLATION OF FURNACE SHALL COMPLY BY CHAPTER 7 OF THE CALIF. MECH. CODE & MFR. SPECS.) (REFER TO ENERGY COMPLIANCE REPORT).
34. PROVIDE CONCRETE PADS FOR AIR CONDITIONING UNITS. (INSTALL PER MFR. SPECIFICATIONS).
39. FAN IN ATTIC (INSTALLATION OF FURNACE SHALL COMPLY BY CHAPTER 7 & SECTION 307.3 OF THE CALIF. MECH. CODE & MFR. SPECS.) (REFER TO ENERGY COMPLIANCE REPORT).
40. DUST SPACE.
41. 18" X 24" MIN. FOUNDATION ACCESS, GASKET OR WEATHERSEAL.
42. 22" X 30" ATTIC ACCESS, GASKET OR WEATHERSEAL.
43. 22" X 30" ATTIC ACCESS, GASKET OR WEATHERSEAL.
46. DECORATIVE GAS APPLIANCE "MAJESTIC" MODEL #DVDV36L/R; AGA ANSI Z83.4 (OR EQUAL) INSTALL PER MFR.
44. DECORATIVE GAS APPLIANCE "MAJESTIC" MODEL #DVDR36; AGA ANSI Z83.4 (OR EQUAL) INSTALL PER MFR.
41. DECORATIVE GAS APPLIANCE "MAJESTIC" MODEL #NVBR/BC34; AGA ANSI Z83.4 (OR EQUAL) INSTALL PER MFR.
48. DECORATIVE GAS APPLIANCE "MAJESTIC" MODEL #NVBR/BC42; AGA ANSI Z83.4 (OR EQUAL) INSTALL PER MFR.
49. DECORATIVE TILE HEARTH. DIM. SHALL COMPLY BY MFR. SPECS.
50. DECORATIVE GAS APPLIANCE "MAJESTIC" MODEL #DOSHN42; AGA ANSI Z83.4 (OR EQUAL) INSTALL PER MFR.
51. INTERIOR STAIRS. SEE PLAN FOR HEIGHT ABOVE FLOOR.
52. SINGLE POLE AND SHELF.
53. 2 POLE AND SHELF.
54. PATIOUT 18" HIGH WALL BALL WITH PRE CAST CONCRETE CAP.
55. LINE OF CARPET TO HARD SURFACE.
56. GUARDRAIL. 34" MINIMUM HEIGHT (U.O.S.). SEE PLAN FOR DETAIL REF. LESS THAN 4" CLEAR SPACE BETWEEN MEMBERS.
54. HANDRAIL. (HEIGHT 34" MIN TO 34" MAX. SEE PLAN FOR DETAIL REF. LESS THAN 4" CLEAR SPACE BETWEEN MEMBERS.
63. 5/8" TYPE "X" GYP.BOARD ALL BALLS AT GARAGE. WRAP BEAMS & POSTS TYPICAL. PROVIDE TWO LAYERS OF 5/8" TYPE "X" GYP. BOARD UNDER WALL COLUMNS IN THE GARAGE.
64. SECURITY DOOR. SEE SCHED. SOLID WOOD DOOR W/ TIGHT-FITTING GASKETS AT THRESHOLD & SILL.
65. 1/2" TYPE "X" GYP. BOARD AT ALL STORAGE UNDER STAIRS. (INSTALL AT WALLS AND CEIL.)
4. CONCRETE STOOP.
10. CONCRETE PORCH AND STEPS.
11. ELASTOMERIC FINISH.
12. BUILT-IN BAR-B-QUE. VERIFY DESIGN WITH OWNERS' SPECS.
15. LINE OF FLOOR ABOVE.
16. LINE OF FLOOR BELOW.
17. FULL HEIGHT MIRRORS.
18. LINE OF CEILING CHANGE ABOVE.
80. 2 x 4 FLAT STUD WALL.
81. 2 x 6 STUD (16" O.C. WALL.
82. 2 x 6 STUD (OR 2 x 4 @ 16" O.C. WALL.
83. 12" THICK CONCRETE WALL.
84. GLASS BLOCK WALL. SEE INT. ELEVS. & GLASS BLOCK NOTES.
85. 2 x 10 STUD (OR 2 x 4 @ 24" O.C. WALL.
86. 2 x 10 STUD (OR 2 x 4 @ 24" O.C. WALL.
88. STUCCO SOFFIT.
89. 2X TEG CEILING.
90. NICHE W/BATHROOM MIRROR. HEAD @ 8'-1" A.F.F.
91. NICHES. SEE INTERIOR ELEVATIONS.
92. SUPPORT FRAMING FOR OPENING. SEE INTERIOR ELEVATIONS.
93. 30" DIA. COLUMN.
94. FISH TANK. VERIFY DESIGN WITH OWNER'S SPECS.
95. FISH TANK EQUIPMENT BOXES.
97. PRE CAST CONCRETE TAPERED COLUMNS.
98. PRE-FABRICATED TAPERED WOOD COLUMNS. SEE INT ELEVS.
99. GARDEN WALL.
100. RETAINING WALL. SEE SITE PLAN FOR EXTENTS.

GENERAL NOTES

1. COMPLY WITH ALL PROVISIONS OF CRC (2001), CMC (2001) CEC (2001), & CBC (2001).
2. WEATHERSTRIP ALL EXTERIOR DOORS & WINDOWS.
3. A. ALL USE-LESS WATER CLOSETS (I.E. GAL RAX)
   B. ALL FAUCETS SHALL HAVE FLOW CONTROL AERATORS WHICH LIMIT WATER DELIVERY OF NO MORE THAN 2.2 GALLONS PER MINUTE FOR SINK AND LAVATORY & TO AND NOMORE THAN 2.5 GALLONS PER MINUTE FOR SHOWERS
4. SEE HEAT LOSS CALCS FOR ACTUAL GLASS AREA.
   ALL GLAZING SHALL BE DOUBLE PANE EXCEPT GARAGE.
5. PROVIDE FIREBLOCKING IN CONCEALED SPACES OF STUD WALLS & PARTITIONS, INCLUDING CONCEALED SPACES, AT STAIRS (IF APPLICABLE, AT CEILING & FLOOR LEVELS, AT INTERVALS NOT EXCEEDING 10' VERTICAL, HORIZONTAL.
6. HVAC DUCTS PASS BOTH VERTICAL TO COMBUSTIBLE MATERIALS AT WALK-IN CLOSETS.
7. GYP BOARD SHALL BE AS FOLLOWS.
   A. WALLS & CEILING.
      FRAMING @ 16" OC - 1/2" GYP BOARD
      FRAMING @ 24" OC - 5/8" GYP BOARD
   B. ENCLOSED USEABLE SPACE UNDER STAIRS SHALL BE 5/8" TYPE "X".
   C. GARAGE WALLS & CEILING S.O.G. - 5/8" TYPE "X". (WRAP ALL POSTS & BEAMS.)
   D. PROVIDE WATER RESISTANT GYPSUM BOARD UNDER TUB AND SHOWER ENCLOSURE MATERIALS TO A HEIGHT OF 30" MIN ABOVE THE DRAIN INLET. CRC 307.1 AND 2512. WATERPROOF OR BSE APPROVED BACKER BOARD UNDER TILE. ALL TILE SHALL BE INSTALLED PER THE TILE COUNCIL OF AMERICA STANDARDS.
   E. ALL INTERIOR WALLS & CEILINGS TO BE TAPED & FINISHED READY FOR PAINT. OUTSIDE CORNERS TO BE ROUNDED TO APPROX. 3/4" RADIUS. NO "BEADED SOFTLINE" CORNERS.
   F. ALL GARAGE WALLS & CEILINGS TO BE TEXTURED LIGHT.
8. ALL INSULATION MATERIAL SHALL HAVE A FLAME SPREAD RATING NOT TO EXCEED 25 AND A SMOKE DENSITY NOT TO EXCEED 450.
9. PROVIDE SEISMIC ANCHORAGE OF APPLIANCES PER CRC SECTION 304.1.
10. PROVIDE ADEQUATE VOLUME OF OUTSIDE COMBUSTION AIR TO ALL APPLIANCES (PER CRC 101.1-101.3) AND TO FAN ENCLOSURE (PER CRC 101.1-101.3).
11. ALL AIR DUCTS PENETRATING SEPARATION WALL OR CEILING BETWEEN GARAGE AND LIVING AREA SHALL HAVE A 20 MIN. FIRE DAMPER.
12. ALL SMOKE DETECTORS SHALL BE 110V W/BATTERY BACK-UP.
13. COMPLY WITH ALL APPLICABLE REQUIREMENTS OF THE 1997 UNIFORM BUILDING SECURITY CODE, CHAPTER 41 "SECURITY PROVISIONS".
14. COMPLY WITH ALL REQUIREMENTS OF SANTA ROSA CITY ORDINANCE SEC. 7-1.1L.004. "ILLUMINATED ADDRESS NUMBERS."
15. ALL SHOWERS AND TUBS SHALL BE PROVIDED WITH A PRESSURE BALANCED OR THERMOSTATIC MIXING VALVE LIMITING WATER TEMPERATURE TO 120°F.
16. WINDOWS PROVIDED AS ESCAPE OPENINGS SHALL HAVE MINIMUM SILL HEIGHT OF 44" ABOVE THE FLOOR, MINIMUM NET CLEAR OPENING HEIGHT OF 24 INCHES, MINIMUM NET CLEAR OPENING WIDTH OF 20 INCHES, SILL HEIGHTS NOT MORE THAN 44 INCHES ABOVE THE FLOOR, OPENING DIRECTLY TO STREET, PUBLIC ALLEY, YARD OR EXIT COURT.
17. WATER HAMMER CONTROL SHALL BE PROVIDED AT CLOTHES WASHER & DISHWASHER PER CPC SEC 1.01.10.
18. BALLS OR PORTIONS THEREOF, RETAINING EARTH AND ENCLOSING INTERIOR SPACES AND FLOORS BELOW GRADE SHALL BE WATER OR DAMP-PROOFED PER CBC APPENDIX CHAPTER 18.
19. ALL EXTERIOR WALL COMPONENTS SHALL BE APPROVED FOR EXTERIOR USE.

DATE 2/03

DRAWN BY:
CHECKED BY:

REVISIONS:	DATE:
1	09-12-03
2	
3	
4	
5	
6	

NOTES

FARRELL-FABER & ASSOCIATES INC.
architecture - planning
1022 Mendocino Avenue
Santa Rosa California 95401
TEL: 707.576.7100
FAX: 707.576.8946
www.farrellfaber.com

DESIGN FOR:

MTA CONSTRUCTION
SKYFARM SUBDIVISION, LOT 42
3111 SKYFARM DRIVE
SANTA ROSA, CALIFORNIA

JOB NO 03037

SHEET

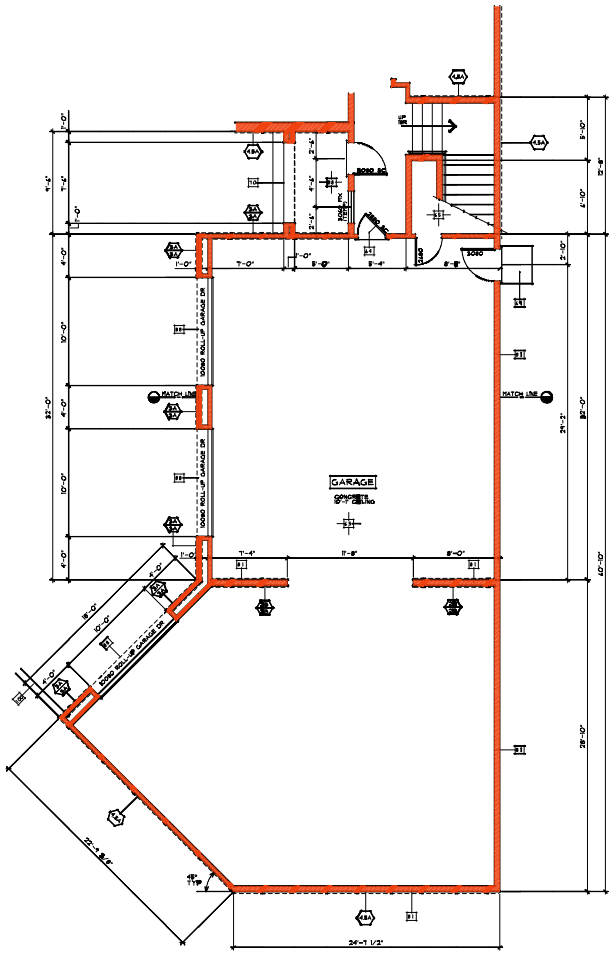

MAIN FLOOR PLAN - GARAGE

SCALE: 1/4" = 1'-0"

FLOOR PLAN NOTES

1. PANTRY - 4 SHELVES.
2. PROVIDE 42" BUILT-IN REFRIGERATOR AND PLUMBING FOR ICE MAKER IN RECESSED WALL BOX.
3. DOUBLE KITCHEN SINK W/GARBAGE DISPOSAL.
4. PROVIDE VENT HOOD AS NECESSARY PER CMC 504.0.
5. PROVIDE GAS TO RANGE.
6. COMMERCIAL GRADE RANGE/OVEN W/METAL HOOD, LIGHT & FAN. VENT TO EXTERIOR AND PROVIDE BACKDRAFT DAMPER. (VERIFY DIMS W/MFR.)
7. BUILT-IN WALL OVEN/MICROWAVE. (VERIFY VENTILATION AND DIMS W/MFR.)
8. BUILT-IN DISHWASHER. (VERIFY DIMENSIONS W/MFR.)
9. LINE OF CABINETS ABOVE.
10. KITCHEN ISLAND COUNTER TOP. (SEE PLAN FOR DIMS.)
12. VEGETABLE SINK W/GARBAGE DISPOSAL.
14. STAINLESS STEEL PANTRY SINK. VERIFY DIMS. W/MFR.
15. TILE SHOWER ENCLOSURE 5/12" MAINSOOT (RTALL SHALL COMPLY W/ SECTION 412.0 OF THE CALIF. PLUMBING CODE.)
19. SHOWER PAN & DRAIN ASSEMBLY. PROVIDE ABS SHOWER PAN PER ANSI A112.19.2 OR ASTM F402, PER LOCAL CODE. KOHLER WHIRLPOOL SYSTEM (1) EQUAL OR BETTER. UL & IAPMO APPROVED. VERIFY MFR. & MODEL# W/OWNER.
20. 30" HIGH CERAMIC TILE SEAT/PLATFORM.
22. TEMPERED GLASS ENCLOSURE
23. MEDICINE CABINET.
24. BASE CABINET.
25. BUTLER'S PANTRY (UPPER AND LOWER CABINETS).
27. LINEN & SHELVES.
28. WASHER SPACE. PROVIDE HOT & COLD WATER AND WASTE. PROVIDE PAN & 3/4" DRAIN AT SECOND FLOOR INSTALLATION.
29. DRYER SPACE. PROVIDE 4" DIA. SMOOTH BALLED VENT THRU FLOOR. PROVIDE VENT TRAP & DRYER VENT. (VENT SHALL COMPLY WITH MFR'S. SPECS. AND SECTIONS 504 & 908 OF THE CMC.)
30. WASHER / DRYER COMBO -PROVIDE HOT & COLD WATER AND WASTE. PROVIDE PAN & 3/4" DRAIN AT SECOND FLOOR INSTALLATION. PROVIDE 4" DIA. SMOOTHED BALLED VENT THRU FLOOR. PROVIDE VENT TRAP & DRYER VENT. (VENT SHALL COMPLY WITH MFR'S. SPECS. AND SECTIONS 504 & 908 OF THE CMC.)
31. PEDESTAL SINK.
33. WATER HEATER ON 18"HIGH WOOD PLATFORM. INSTALL PRESSURE RELIEF VALVE W/VENT, AND DRAIN TO OUTSIDE. (COMPLY WITH CHAPTER 5 OF THE CALIF.MECHANICAL CODE & SECTION 608 OF THE CMC.)
(REFER TO ENERGY COMPLIANCE REPORT).
34. FAN ON 18"HIGH PLATFORM.(INSTALLATION OF FURNACE SHALL COMPLY W/CHAPTER 5 OF THE CALIF.MECH.CODE & MFR. SPECS.) (REFER TO ENERGY COMPLIANCE REPORT).
36. PROVIDE CONCRETE PADS FOR AIR CONDITIONING UNITS. (INSTALL PER MFR. SPECIFICATIONS).
39. FAN IN ATTIC (INSTALLATION OF FURNACE SHALL COMPLY W/ CHAPTER 5 & SECTION 307.3 OF THE CALIF.MECH.CODE & MFR. SPECS.) (REFER TO ENERGY COMPLIANCE REPORT).
40. NOT SPACE.
41. 18" X 30" MIN. FOUNDATION ACCESS. GASKET OR WEATHERSEAL.
42. 22" X 36" ATTIC ACCESS. GASKET OR WEATHERSEAL.
43. 22" X 36" ATTIC ACCESS. GASKET OR WEATHERSEAL.
45. DECORATIVE GAS APPLIANCE "MAJESTIC" MODEL #24CDVSL/R; ASA ANSI Z223.1 (OR EQUAL) (INSTALL PER MFR.)
46. DECORATIVE GAS APPLIANCE "MAJESTIC" MODEL #DVB34; ASA ANSI Z223.1 (OR EQUAL) (INSTALL PER MFR.)
47. DECORATIVE GAS APPLIANCE "MAJESTIC" MODEL #MVBB/BC34; ASA ANSI Z223.1 (OR EQUAL) (INSTALL PER MFR.)
48. DECORATIVE GAS APPLIANCE "MAJESTIC" MODEL #MVBB/BC42; ASA ANSI Z223.1 (OR EQUAL) (INSTALL PER MFR.)
49. DECORATIVE TILE HEARTH. DIM. SHALL COMPLY W/ MFR. SPECS.
51. INTERIOR FOOTBALL. SEE PLAN FOR HEIGHT ABOVE FLOOR.
52. DOUBLE POLE AND SHELF.
54. PINTRUN 36" HIGH HALF WALL WITH WOOD CAP.
55. LINE OF CARPET TO HARD SURFACE.
56. GUARDRAIL. 36" MINIMUM HEIGHT (U.O.N.) SEE PLAN FOR DETAIL REF. LESS THAN 4" CLEAR SPACE BETWEEN MEMBERS.
57. HANDRAIL. (HEIGHT: 34" MIN TO 38" MAX) SEE PLAN FOR DETAIL REF. LESS THAN 4" CLEAR SPACE BETWEEN MEMBERS.
58. 5/8" TYPE "X" GYP.BOARD ALL WALLS AT GARAGE. BEAM BEARS 1 POSITS TYPICAL. PROVIDE 1 LAYERS OF 5/8" TYPE "X" GYP.BOARD UNDER T.O.C.O.JOISTS IN THE GARAGE.
64. GARAGE DOOR. 3'-0" SOLID WOOD DOOR W/ TIGHT-FITTING GASKETS AND WEATHER SEALS.
65. 5/8" TYPE "X" GYP. BOARD ALL STORAGE UNDER STAIRS. (INSTALL AT WALLS AND CEILING.)
69. CONCRETE STOOP.
70. CONCRETE PORCH AND STEPS.
72. ELASTOMERIC FINISH.
73. BUILT-IN BAR-B-QUE. VERIFY DESIGN WITH OWNERS' SPECS.
75. LINE OF FLOOR ABOVE.
76. LINE OF FLOOR BELOW.
77. FULL HEIGHT MIRRORS.
78. LINE OF CEILING CHANGE ABOVE.
80. 3 x 4 FLAT STUD WALL.
81. 2 x 6 STUDS (OR 2-2 x 4) 16" O.C. WALL.
82. 2 x 8 STUDS (OR 3 x 4) 16" O.C. WALL.
83. 12" THICK CONCRETE WALL - SSD.
84. GLASS BLOCK WALL. SEE INT.ELEVS. & GLASS BLOCK NOTES.
85. 2 x 12 STUDS (OR 2-2 x 8) @ 16" O.C.WALL.
86. 2 x 10 STUDS (OR 2 x 4 & 2 x 6) @ 16" O.C.WALL.
89. STUCCO SOFFIT.
91. 1 X TEG SOFFIT.
90. NICHE @ BATHROOM MIRROR. HEAD @ 6'-1" A.F.F.
91. ART NICHE. SEE INTERIOR ELEVATIONS.
92. SECURITY LATCH FOR OPENING. SEE INTERIOR ELEVATIONS.
93. FISH TANK.
94. FISH TANK. VERIFY DESIGN WITH OWNER'S SPECS.
95. FISH TANK EQUIPMENT ROOM.
96. HOT TUB. VERIFY DESIGN WITH OWNER'S SPECS.
97. PRE-CAST CONCRETE TAPERED COLUMNS.
98. PRE-FABRICATED TAPERED WOOD COLUMNS. SEE INT ELEVS.
99. GARDEN WALL.
100. RETAINING WALL. SEE SITE PLAN FOR EXTENTS.

GENERAL NOTES

1. COMPLY WITH ALL PROVISIONS OF CBC (2001), CPC (2001) CEC (2001), & CRC (2001).
2. WEATHERSTRIP ALL EXTERIOR DOORS & WINDOWS.
3. A. USE LOW-FLUSH WATER CLOSETS (1.6 GAL MAX)
   B. ALL FAUCETS SHALL HAVE FLOW CONTROL AERATORS WHICH LIMIT WATER DELIVERY TO NO MORE THAN 2.2 GALLONS PER MINUTE FOR SINK AND LAVATORY & TO NO MORE THAN 2.5 GALLONS PER MINUTE FOR SHOWERS
4. SEE HEAT LOSS CALCS FOR ACTUAL GLASS AREA. ALL GLAZING SHALL BE DOUBLE PANE EXCEPT GARAGE.
5. PROVIDE FIRESTOPPING IN CONCEALED SPACES OF STUD WALLS AND PARTITIONS, AT CEILING AND FLOOR LEVELS, STAIRS (IF APPLICABLE), AT CEILING AND FLOOR LEVELS, & AT 10' INTERVALS BOTH VERTICAL & HORIZONTAL.
6. MAINTAIN 18" CLEAR FROM LIGHT TO COMBUSTIBLE MATERIALS AT WALL-IN CLOSETS.
7. GYP BOARD SHALL BE AS FOLLOWS:
   A. WALLS & CEILING
      FRAMING @ 16" OC - 1/2" GYP BOARD
      FRAMING @ 24" OC - 5/8" GYP BOARD
   B. ENCLOSED USEABLE SPACE UNDER STAIRS SHALL BE 5/8" TYPE "X"
   C. GARAGE WALLS & CEILING U.O.N. - 5/8" TYPE "X". (BEAM ALL POSTS & BEAMS.)
   D. PROVIDE WATER RESISTANT GYPSUM BOARD UNDER TUB AND SHOWER ENCLOSURE MATERIALS TO A HEIGHT OF 10' MIN ABOVE THE DRAIN INLET. CBC 801 AND 2512. WATERPROOF ON USE APPROVED FOR BOARD UNDER TILE. AUTHORIZED TILE INSTALLED PER THE TILE COUNCIL OF AMERICA STANDARDS.
   E. ALL INTERIOR WALLS & CEILINGS TO BE TAPED & TEXTURED, U.O.N. ALL OUTSIDE CORNERS TO BE ROUNDED TO APPROX. 3/4" RAD. W/ DEADED SOFTLINE CORNERS.
   F. ALL GARAGE WALLS & CEILINGS TO BE TEXTURED, U.O.N.
8. ALL INSULATION MATERIAL SHALL HAVE A FLAME SPREAD RATING NOT TO EXCEED 25 AND A SMOKE DENSITY NOT TO EXCEED 450.
9. PROVIDE SEISMIC ANCHORAGE OF APPLIANCES PER CMC SECTION 304.4.
10. PROVIDE ADEQUATE VOLUME OF OUTSIDE COMBUSTION AIR TO ALL APPLIANCES (PER CMC 701.1, 701.3) AND TO ENCLOSED ATTIC SPACES (CRC 326).
11. ALL AIR CONDITIONING, HEATING, VENTILATION BALL OR CEILING DETWEEN GARAGE AND LIVING AREA SHALL BE 1/4 GA.MIN. PER CRC 302.6 & 302.7.
12. ALL SMOKE DETECTORS SHALL BE 110v B/BATTERY BACK-UP.
13. COMPLY WITH ALL APPLICABLE REQUIREMENTS OF THE 1991 UNIFORM BUILDING SECURITY CODE, CHAPTER 41 "SECURITY PROVISION".
14. COMPLY WITH ALL REQUIREMENTS OF SANTA ROSA CITY ORDINANCE SEC.16-16.034, "ILLUMINATED ADDRESS REQS."
15. ALL SHOWERS AND TUBS SHALL BE PROVIDED WITH A PRESSURE BALANCED OR THERMOSTATIC MIXING VALVE. LIMITING WATER TEMPERATURE TO 120°F.
16. WINDOWS PROVIDED AS ESCAPE OPENINGS SHALL HAVE A MINIMUM NET CLEAR OPENING OF 5.7 SQUARE FEET. MINIMUM NET CLEAR OPENING HEIGHT OF 24 INCHES. MINIMUM NET CLEAR OPENING WIDTH OF 20 INCHES. SILL HEIGHTS NOT MORE THAN 44 INCHES ABOVE THE FLOOR. OPENING DIRECTLY TO STREET, PUBLIC ALLEY, YARD OR EXIT COURT. (CBC 310.1).
17. WATER HAMMER CONTROL SHALL BE PROVIDED AT CLOTHES WASHER & DISHWASHER PER CPC 609.10.
18. BALKS & PORTIONS THEREOF, BEARING OR BEARING WITH AND ENCLOSING INTERIOR SPACES AND FLOORS BELOW GRADE SHALL BE WATER OR DAMP-PROOFED PER CBC APPROVED CHAPTER 18.
19. EXTERIOR WALL COMPONENTS SHALL BE APPROVED FOR EXTERIOR USE.

FARRELL-FABER
& ASSOCIATES INC.
ARCHITECTURE • PLANNING
1022 Mendocino Avenue
Santa Rosa, California 95401
TEL: 707.579.2646
FAX: 707.579.2646
www.farrellfaber.com

DATE: 2/03

DRAWN BY:
CHECKED BY:

REVISIONS:	DATE:
1	04-15-03
2	
3	
4	
5	

NOTES

DESIGN FOR:

MTA CONSTRUCTION

SKYFARM SUBDIVISION, LOT 42
3777 SKYFARM DRIVE
SANTA ROSA, CALIFORNIA

JOB NO: 03037

SHEET: 4

4/30/2003 8:59 PM

N:\2003\03037\ADA\ISONLDCS 4-15-2003 4:04 PM

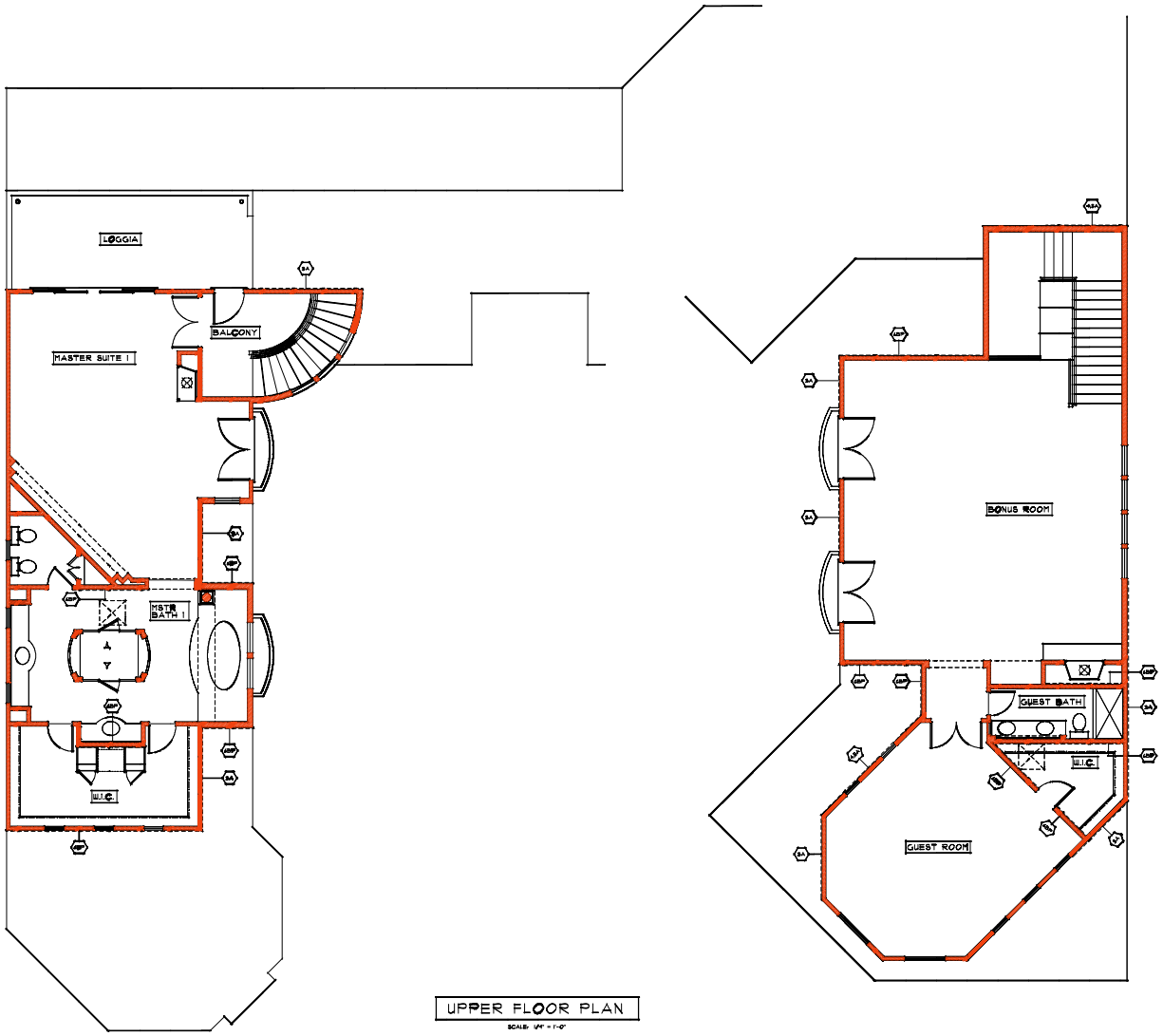

UPPER FLOOR PLAN

SCALE: 1/4" = 1'-0"

FLOOR PLAN NOTES

1. PANTRY - 4 SHELVES.
2. PROVIDE 42" BUILT-IN REFRIGERATOR AND PLUMBING FOR ICE MAKER IN RECESSED WALL BOX.
3. DOUBLE KITCHEN SINK W/GARBAGE DISPOSAL. (PROVIDE VENT LOOP AS NECESSARY PER CPC 904.0)
4. FREEZER (VERIFY DIMS W/ MFR.)
5. COMMERCIAL GRADE RANGE/OVEN W/METAL HOOD, LIGHT & FAN, VENT TO EXTERIOR AND PROVIDE BACKDRAFT DAMPER. (VERIFY DIMS W/MFR.)
6. BUILT-IN WALL OVEN/MICROWAVE. (VERIFY VENTILATION AND DIMS W/MFR.)
7. BUILT-IN DISHWASHER. (VERIFY DIMENSIONS W/MFR.)
8. BUILT-IN TRASH COMPACTOR. (VERIFY DIMENSIONS W/MFR.)
9. LINE OF CABINETS ABOVE.
10. KITCHEN ISLAND COUNTER TOP. (SEE PLAN FOR DIMS.)
12. VEGETABLE SINK W/GARBAGE DISPOSAL.
14. STAINLESS STEEL PANTY SINK. VERIFY DIMS. W/MFR.
16. TILE SHOWER ENCLOSURE W/12" WAINSCOT (STALL SHALL COMPLY W/ SECTION 412.0 OF THE CALIF. PLUMBING CODE.)
19. 42" X 72" ACRYLIC TUB W/TILE WAINSCOT. PROVIDE ONE-PIECE WELDED TRAP OR ACCESS PANEL PER LOCAL CODE. KOHLER WHIRLPOOL SYSTEM II (EQUAL OR BETTER) BL 1 (APPD APPROVED. VERIFY MFR. & MODEL# W/OWNER.
20. 30" HIGH CERAMIC TILE SEAT/PLATFORM.
21. FIBERGLASS ENCLOSURE
22. MEDICINE CABINET.
24. BASE CABINET.
24. BUTLER'S PANTRY (UPPER AND LOWER CABINETS).
27. LINEN-4 SHELVES
28. WASHER SPACE. PROVIDE HOT & COLD WATER AND WASTE. PROVIDE PAN & 2" DRAIN AT SECOND FLOOR INSTALLATIONS.
29. DRYER SPACE. PROVIDE 4" DIA. SMOOTH BALLED VENT THRU FLOOR. PROVIDE VENT TRAP & DRYER VENT. (VENT SHALL COMPLY WITH NFR'S. SPECS. AND SECTIONS 504 & 908 OF THE CRC.)
30. WASHER / DRYER COMBO -PROVIDE HOT & COLD WATER AND WASTE. PROVIDE PAN & 2" DRAIN AT SECOND FLOOR INSTALLATIONS. PROVIDE 4" DIA. SMOOTHED BALLED VENT THRU FLOOR. (VENT SHALL COMPLY WITH NFR'S. SPECS. AND SECTIONS 504 & 908 OF THE CRC.)
31. PEDESTAL SINK.
35. GAS HEATER ON 18"HIGH WOOD PLATFORM. INSTALL PRESSURE RELIEF VALVE W/VENT, AND DRAIN TO OUTSIDE (COMPLY WITH CHAPTER 8 OF THE CALIF. MECHANICAL CODE & SECTION 106.3 OF THE CRC)
(REFER TO ENERGY COMPLIANCE REPORT)
34. 1 SET OF HIGH PLATFORM INSTALLATION OF FURNACE SHALL COMPLY W/CHAPTER 4 OF THE CALIF.MECH.CODE & NFR SPECS.) (REFER TO ENERGY COMPLIANCE REPORT)
35. PROVIDE CONCRETE PADS FOR AIR CONDITIONING UNITS. (INSTALL PER NFR. SPECIFICATIONS)
39. FAN IN ATTIC (INSTALLATION OF FURNACE SHALL COMPLY W/ CHAPTER 4 (SECTION 307.3 OF THE CALIF. MECH.CODE & NFR. SPECS.) (REFER TO ENERGY COMPLIANCE REPORT)
40. DUCT SPACE.
41. 18" X 24" MIN. FOUNDATION ACCESS. GASKET OR WEATHERSEAL.
42. 22" X 30" ATTIC ACCESS. GASKET OR WEATHERSEAL.
43. 30" X 30" ATTIC ACCESS. GASKET OR WEATHERSEAL.
46. DECORATIVE GAS APPLIANCE "MAJESTIC" MODEL #SAC@VSL/R, AGA ANSI Z223. (OR EQUAL) (INSTALL PER MFR)
46. DECORATIVE GAS APPLIANCE "MAJESTIC" MODEL #DVM34, AGA ANSI Z223. (OR EQUAL) (INSTALL PER MFR)
47. DECORATIVE GAS APPLIANCE "MAJESTIC" MODEL #DVMR/BC34, AGA ANSI Z223. (OR EQUAL) (INSTALL PER MFR)
48. DECORATIVE GAS APPLIANCE "MAJESTIC" MODEL #DVMR/BC42, AGA ANSI Z223. (OR EQUAL) (INSTALL PER MFR)
49. DECORATIVE TILE HEARTH. DIM. SHALL COMPLY W/ MFR. SPECS.
50. DECORATIVE GAS APPLIANCE "MAJESTIC" MODEL #DGMM42, AGA ANSI Z223. (OR EQUAL) (INSTALL PER MFR)
51. INTERIOR POTSHELF. SEE PLAN FOR HEIGHT ABOVE FLOOR.
52. SINGLE POLE AND SHELF.
54. DOUBLE POLE AND SHELF.
56. MINIMUM 36" HIGH HALF WALL WITH PRE CAST CONCRETE CAP.
57. LINE OF CARPET TO HARD SURFACE.
58. GUARDRAIL. 34" MINIMUM HEIGHT (S.O.H.). (SEE PLAN FOR HEIGHT. (SEE SECTION 1013.3 OF THE CALIF. BLDG. CODE)
59. HANDRAIL. (HEIGHT TWO & 1/2" TO 34" ABOVE TREAD NOSE FOR INSTALL SEP. LESS THAN 4" CLEAR SPACE BETWEEN MEMBERS.
63. 1/4" TYPE "X" GYP.BOARD AL BALLS AT GARAGE. WRAP BEAMS & POSTS TYPICAL. PROVIDE TWO LAYERS OF 5/8" TYPE "X" GYP.BOARD UNDER T.J. CEILOISTS IN THE GARAGE.
64. SELF CLOSING, 3/4" SOLID WOOD DOOR W/ TIGHT-FITTING GASKETS AND SWEEPER & SILL.
65. 1/4" TYPE "X" GYP. BOARD AT ALL STORAGE UNDER STAIRS. (INSTALL AT WALLS AND CEILING.)
69. CONCRETE STOOP.
70. CONCRETE PORCH AND STEPS.
72. BLASTOSEAL TRIBE.
73. ROOF DRAINAGE. VERIFY DESIGN WITH OWNERS' SPECS.
75. LINE OF FLOOR ABOVE.
76. LINE OF FLOOR BELOW.
77. FULL HEIGHT MIRRORS.
78. LINE OF CEILING CHANGE ABOVE.
80. 2 x 4 FLAT STUD WALL.
81. 2 x 4 STEPS @ 16" OC WALL.
82. 2 x 6 STEPS (OR 2-2 x 4) @ 16" O.C. WALL.
83. 12" THICK CONCRETE WALL - SEE.
85. GRAB BLOCK WALL - SEE INT.ELEVS. & GLASS BLOCK NOTES.
86. 2 x 10 STEPS (OR 2-2 x 12) @ 16" O.C.WALL.
87. 2 x 12 STEPS (OR 2 x 4 & 2 x 6) @ 16" O.C. WALL.
88. STUCCO SOFFIT.
89. 2X FIG CEILING.
90. NICHE & BATHROOM MIRROR. HEAD @ 8'-1" A.F.F.
91. NICHE. SEE INTERIOR ELEVATIONS.
92. SEGMENT ARCH FOR OPENING. SEE INTERIOR ELEVATIONS.
93. SOFFIT @ 8'-1" A.F.F.
94. FISH TANK. VERIFY DESIGN WITH OWNER'S SPECS.
95. FISH TANK EQUIPMENT ROOM.
97. PRE CAST CONCRETE TAPERED COLUMNS.
98. PRE-FABRICATED TAPERED WOOD COLUMNS. SEE INT ELEVS.
99. GARDEN WALL.
100. RETAINING WALL. SEE SITE PLAN FOR EXTENTS.

GENERAL NOTES

1. COMPLY WITH ALL PROVISIONS OF CBC (2001), CPC (2001) CEC (2001), & CRC (2001).
2. WEATHERSTRIP ALL EXTERIOR DOORS & WINDOWS.
3. A. USE LOW-FLUSH WATER CLOSETS (1.6 GAL MAX)
   B. ALL FAUCETS SHALL HAVE FLOW CONTROL AERATORS WHICH LIMIT WATER DELIVERY TO NO MORE THAN 2.2 GALLONS PER MINUTE AT 60 PSI. (AERATORS TO BE LOCATED THE MAXIMUM DISTANCE PER MINUTE NUMBERS
4. SEE HEAT LOSS CALCS FOR ACTUAL GLASS AREA.
   ALL GLAZING SHALL BE DOUBLE PANE EXCEPT GARAGE.
5. PROVIDE FIREBLOCKING IN CONCEALED SPACES OF STUD WALLS & PARTITIONS, INCLUDING FURRED SPACES, AT STAIRS, IN APPLICABLE, AT CEILING & FLOOR LEVELS, & AT 10' INTERVALS BOTH VERTICAL & HORIZONTAL.
6. MAINTAIN 18" CLEAR FROM LIGHT TO COMBUSTIBLE MATERIALS AT BALK-IN CLOSETS.
7. GYP BOARD SHALL BE AS FOLLOWS:
   A. WALLS & CEILING
      FRAMING @ 16" OC - 1/2" GYP BOARD
      FRAMING @ 24" OC - 5/8" GYP BOARD
   B. ENCLOSED USEABLE SPACE UNDER STAIRS SHALL BE 5/8" TYPE "X"
   C. GARAGE WALLS & CEILING S.O.H. - 5/8" TYPE "X" HEAVY ALL POSTS & BEAMS.
   D. PROVIDE WATER-RESISTANT GYPSUM BOARD UNDER TUB ENCLOSURES, WITH AT LEAST A HEIGHT OF 3' ABOVE THE DRAIN INLET. (CRC 307.2 AND 25.2)
   WATERPROOF OR USE APPROVED BACKER BOARD UNDER TILE. ALL TILE SHALL BE INSTALLED PER THE TILE COUNCIL OF AMERICA STANDARDS.
   E. ALL INTERIOR WALLS & CEILINGS TO BE TAPED & TEXTURED, SON. ALL OUTSIDE CORNERS TO BE ROUNDED TO APPROX. 5/4" RAD. W/"BEADEX SOFTLINE" CORNERS.
   F. ALL GARAGE WALLS & CEILINGS TO BE TEXTURED, SON.
8. ALL INSULATION MATERIAL SHALL HAVE A FLAME SPREAD RATING NOT TO EXCEED 25 AND A SMOKE DENSITY NOT TO EXCEED 450.
9. PROVIDE SEISMIC ANCHORAGE OF APPLIANCES PER CRC SECTION 304.1.
10. PROVIDE ADEQUATE VOLUME OF OUTSIDE COMBUSTION AIR TO FAN ENCLOSURE (PER CRC 701.2(1), (2), (3) AND TO FAN ENCLOSURE (PER CRC 701.2(4), 3).
11. ALL AIR DUCTS PENETRATING SEPARATION WALL OR CEILING BETWEEN GARAGE AND LIVING AREA SHALL BE 26 GA MIN. PER CRC 302 & EXCEP. 5.
12. ALL SMOKE DETECTORS SHALL BE 110V W/BATTERY BACK-UP.
13. COMPLY WITH ALL APPLICABLE REQUIREMENTS OF THE "RESIDENTIAL BUILDING SECURITY CODE, CHAPTER 41 (SECURITY PROVISIONS).
14. COMPLY WITH ALL REQUIREMENTS OF SANTA ROSA CITY ORDINANCE SEC. 1-18.054, "ILLUMINATED ADDRESS NOS."
15. PRESSURE BALANCED OR THERMOSTATIC MIXING VALVE. PRESSURE BALANCED OR THERMOSTATIC MIXING VALVE LIMITING WATER TEMPERATURE TO 120 F.
16. WINDOWS PROVIDED AS ESCAPE OPENINGS SHALL HAVE A MINIMUM NET CLEAR OPENING OF 5.7 SQUARE FEET; MINIMUM NET CLEAR OPENING HEIGHT OF 24 INCHES, MINIMUM NET CLEAR OPENING WIDTH OF 20 INCHES. SILL HEIGHT NOT OVER THAN 44 INCHES ABOVE THE FLOOR. (WINDOWS ADJACENT TO STREET, PUBLIC ALLEY, YARD OR EQUIVALENT SPACE.)
17. WATER HAMMER CONTROL SHALL BE PROVIDED AT CLOTHES WASHER & DISHWASHER PER CPC SEC 604.10.
18. WALLS, OR PORTIONS THEREOF, RETAINING BATH AND ENCLOSING INTERIOR SPACES AND FLOORS BELOW GRADE SHALL BE WATER OR DAMP-PROOFED PER CBC APPENDIX CHAPTER 18.
19. ALL EXTERIOR WALL COMPONENTS SHALL BE APPROVED FOR EXTERIOR USE.

DATE 2/03

DRAWN BY:
CHECKED BY:

REVISIONS: DATE:
01-8-03

NOTES

FARRELL·FABER & ASSOCIATES INC.
ARCHITECTURE • PLANNING
1022 Mendocino Avenue
Santa Rosa California 95401
TEL: 707.578.2811
FAX: 707.578.2846
www.farrellfaber.com

DESIGN FOR:

MTA CONSTRUCTION

SKYFARM SUBDIVISION, LOT 42
3171 SKYFARM DRIVE
SANTA ROSA, CALIFORNIA

SHEET

JOB NO. 03037

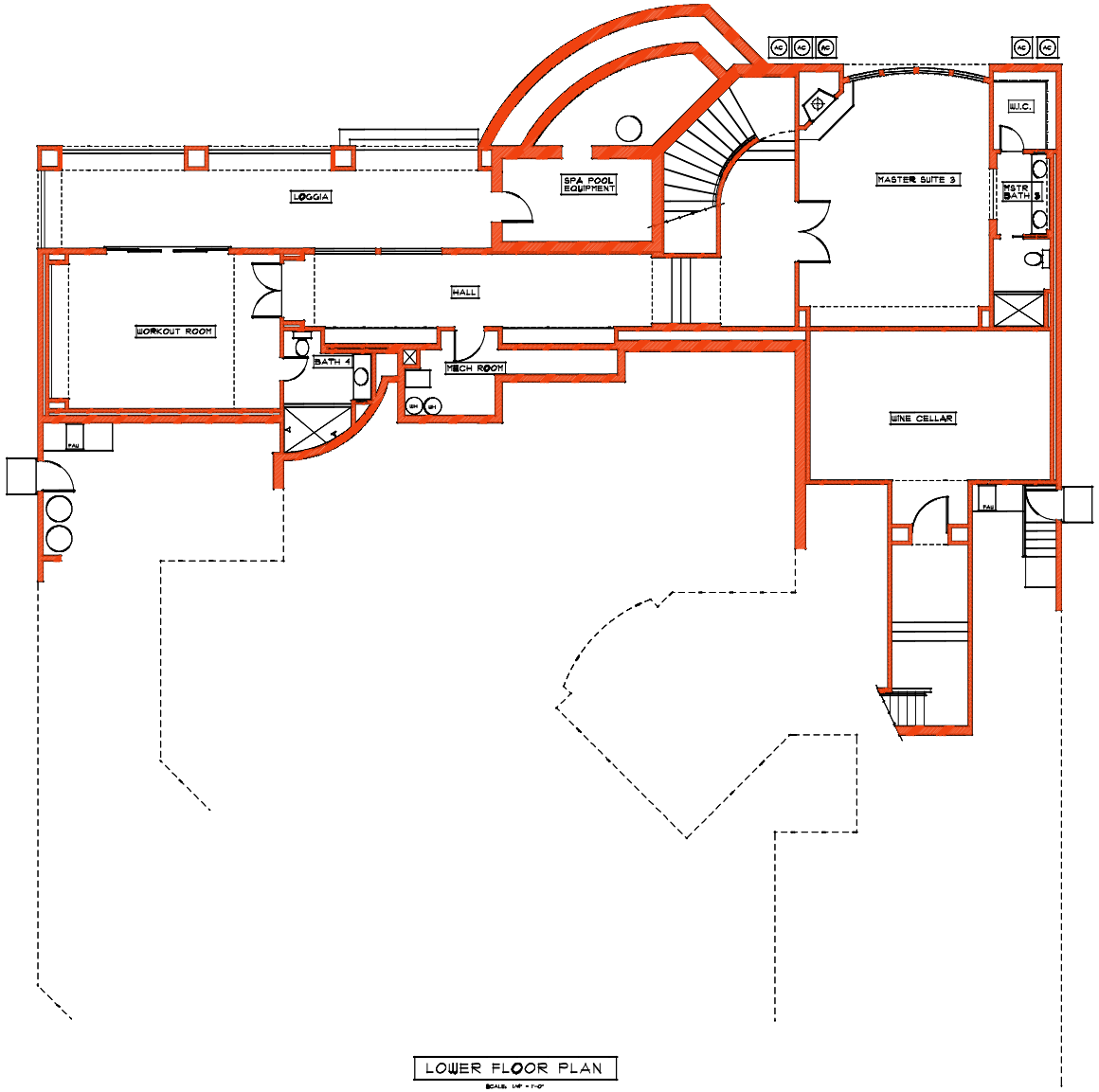

LOWER FLOOR PLAN

SCALE: 1/4" = 1'-0"

FLOOR PLAN NOTES

1. PANTRY - 6 SHELVES.
2. PROVIDE 42" BUILT-IN REFRIGERATOR AND PLUMBING FOR ICE MAKER IN RECESSED WALL BOX.
3. DOUBLE KITCHEN SINK W/GARBAGE DISPOSAL. (PROVIDE VENT LOOP AS NECESSARY PER CPC 904.0)
4. FREEZER (VERIFY DIMS W/ OWNER.)
5. COMMERCIAL GRADE RANGE/OVEN W/METAL HOOD. LIGHT & FAN. VENT TO EXTERIOR AND PROVIDE BACKDRAFT DAMPER. (VERIFY DIMS W/MFR.)
6. BUILT-IN WALL OVEN/MICROWAVE. (VERIFY VENTILATION AND DIMS W/MFR.)
7. BUILT-IN DISHWASHER. (VERIFY DIMENSIONS W/MFR.)
8. BUILT-IN TRASH COMPACTOR. (VERIFY DIMENSIONS W/MFR.)
9. LINE OF CABINETS ABOVE.
10. KITCHEN ISLAND COUNTER TOP. (SEE PLAN FOR DIMS.)
12. VEGETABLE SINK W/GARBAGE DISPOSAL.
13. STAINLESS STEEL PANTY SINK. VERIFY DIMS. W/MFR.
14. TILE SHOWER ENCLOSURE 8'12" WAINSCOT (STALL SHALL COMPLY W/ SECTION 412.0 OF THE CALIF. PLUMBING CODE.)
15. 42" X 72" ACRYLIC TUB W/TILE WAINSCOT. PROVIDE ONE-PIECE WELDED TRAP OR ACCESS PANEL PER LOCAL CODE. KOHLER WHIRLPOOL SYSTEM II (EQUAL OR BETTER) SL 1 (APPRO APPROVED. VERIFY MFR. & MODEL# W/OWNER.
20. 30" HIGH CERAMIC TILE SEAT/PLATFORM.
21. FREEDOM GLASS ENCLOSURE
22. MEDICINE CABINET.
24. BASE CABINET.
24. BUTLER'S PANTRY (UPPER AND LOWER CABINETS).
25. LINEN-4 SHELVES
28. WASHER SPACE. PROVIDE HOT & COLD WATER AND WASTE. PROVIDE PAN & 2/4" DRAIN AT SECOND FLOOR INSTALLATIONS.
29. DRYER SPACE. PROVIDE 4" DIA. SMOOTH BALLED VENT THRU FLOOR. PROVIDE VENT TRAP & DRYER VENT. (VENT SHALL COMPLY WITH MFR'S. SPECS. AND SECTIONS 504 & 908 OF THE CRC.)
30. WASHER / DRYER COMBO -PROVIDE HOT & COLD WATER AND WASTE. PROVIDE PAN & 2/4" DRAIN AT SECOND FLOOR INSTALLATIONS. PROVIDE 4" DIA. SMOOTHED BALLED VENT THRU FLOOR. (VENT SHALL COMPLY WITH MFR'S. SPECS. AND SECTIONS 504 & 908 OF THE CRC.)
31. PEDESTAL SINK.
35. GAS HEATER ON 18"HIGH WOOD PLATFORM. INSTALL PRESSURE RELIEF VALVE W/VENT, AND DRAIN TO OUTSIDE (COMPLY WITH CHAPTER 8 OF THE CALIF. MECHANICAL CODE & SECTION 608.3 OF THE CRC.)
34. (REFER TO ENERGY COMPLIANCE REPORT)
34. TOP OF HIGH PLATFORM INSTALLATION OF FURNACE SHALL COMPLY W/CHAPTER 4 OF THE CALIF.MECH CODE & MFR. SPECS.) (REFER TO ENERGY COMPLIANCE REPORT)
35. PROVIDE CONCRETE PADS FOR AIR CONDITIONING UNITS. (INSTALL PER MFR. SPECIFICATIONS).
39. FAN IN ATTIC (INSTALLATION OF FURNACE SHALL COMPLY W/ CHAPTER 7 & SECTION 307.3 OF THE CALIF.MECH CODE & MFR. SPECS.) (REFER TO ENERGY COMPLIANCE REPORT)
40. DUCT SPACE.
41. 18" X 24" MIN. FOUNDATION ACCESS. GASKET OR WEATHERSEAL.
42. 22" X 30" ATTIC ACCESS. GASKET OR WEATHERSEAL.
43. 30" X 30" ATTIC ACCESS. GASKET OR WEATHERSEAL.
45. DECORATIVE GAS APPLIANCE "MAJESTIC" MODEL #SLCDVSL/R; AGA ANSI 2223. (FOR EQUAL) (INSTALL PER MFR).
46. DECORATIVE GAS APPLIANCE "MAJESTIC" MODEL #DVBR34; AGA ANSI 2223. (FOR EQUAL) (INSTALL PER MFR).
47. DECORATIVE GAS APPLIANCE "MAJESTIC" MODEL #NVBR/BC34; AGA ANSI 2223. (FOR EQUAL) (INSTALL PER MFR).
48. DECORATIVE GAS APPLIANCE "MAJESTIC" MODEL #NVBR/BC42; AGA ANSI 2223. (FOR EQUAL) (INSTALL PER MFR).
49. DECORATIVE TILE HEARTH. DIM. SHALL COMPLY W/ MFR. SPECS.
50. DECORATIVE GAS APPLIANCE "MAJESTIC" MODEL #DOMH42; AGA ANSI 2223. (FOR EQUAL) (INSTALL PER MFR).
51. INTERIOR POTSHELF. SEE PLAN FOR HEIGHT ABOVE FLOOR.
52. SINGLE POLE AND SHELF.
54. DOUBLE POLE AND SHELF.
56. MINIMUM 36" HIGH HALF WALL WITH PRE CAST CONCRETE CAP.
57. LINE OF CARPET TO HARD SURFACE.
58. GUARDRAIL. 34" MINIMUM HEIGHT (E.O.N.) (SEE PLAN FOR HEIGHT REQ'D.) (SEE SECTION 1013 OF THE CALIF. BLDG. CODE)
59. HANDRAIL. (HEIGHT THAN 34" TO 38" RAIL SEE PLAN FOR DETAIL REQ. (LESS THAN 4" CLEAR SPACE BETWEEN MEMBERS.
63. 1/8" TYPE "X" GYP.BOARD AL BALLS AT GARAGE. WRAP BEARS & POSTS TYPICAL. PROVIDE TWO LAYERS OF 5/8" TYPE "X" GYP. BOARD UNDER T.J. CLG.JOISTS IN THE GARAGE.
64. SELF CLOSING (3/4" SOLID WOOD DOOR W/ TIGHT-FITTING GASKETS AND SWEEPER & SILL.
65. 1/8" TYPE "X" GYP. BOARD AT ALL STORAGE UNDER STAIRS. (INSTALL AT WALLS AND CEIL.)(G.)
69. CONCRETE STOOP.
70. CONCRETE PORCH AND STEPS.
72. ELASTOMERIC TRIBEC.
73. BALCONY DECK. VERIFY DESIGN WITH OWNERS' SPECS.
75. LINE OF FLOOR ABOVE.
76. LINE OF FLOOR BELOW.
77. FULL HEIGHT MIRRORS.
78. LINE OF CEILING CHANGE ABOVE.
80. 2 x 4 FLAT STUD WALL.
81. 2 x 4 STUDS @ 16" OC WALL.
82. 2 x 6 STUDS (OR 2-2 x 4) @ 16" O.C. WALL.
83. 12" THICK CONCRETE WALL - SOL.
85. GLASS BLOCK WALL (SEE INT.ELEVS. & GLASS BLOCK NOTES.
86. 2 x 10 STUDS (OR 2-2 x 10) @ 16" O.C.WALL.
87. 2 x 12 STUDS (OR 2 x 4 & 2 x 6) @ 16" O.C. WALL.
88. STUCCO SOFFIT.
89. 2X FIG CEILING.
90. NICHE @ BATHROOM MIRROR. HEAD @ 8'-1" A.F.F.
91. NICHE. SEE INTERIOR ELEVATIONS.
92. SEGMENT ARCH TOP OPENING. SEE INTERIOR ELEVATIONS.
93. SOFFIT @ 8'-1" A.F.F.
94. FISH TANK. VERIFY DESIGN WITH OWNER'S SPECS.
95. FISH TANK EQUIPMENT ROOM.
97. PRE CAST CONCRETE TAPERED COLUMNS.
98. PRE-FABRICATED TAPERED WOOD COLUMNS. SEE INT ELEVS.
99. GARDEN WALL.
100. RETAINING WALL. SEE SITE PLAN FOR EXTENTS.

GENERAL NOTES

1. COMPLY WITH ALL PROVISIONS OF CBC (2001), CPC (2001) CEC (2001), & CRC (2001).
2. WEATHERSTRIP ALL EXTERIOR DOORS & WINDOWS.
3. A. USE LOW-FLUSH WATER CLOSETS (1.6 GAL PER FLUSH)
   B. ALL FAUCETS SHALL HAVE FLOW CONTROL AERATORS WHICH LIMIT WATER DELIVERY TO NO MORE THAN 2.2 GALLONS PER MINUTE AT 60 PSI. (SHOWER HEADS TO NO MORE THAN 2.5 GALLONS PER MINUTE OR THOSE
4. USE HEAT LOSS CALCS FOR ACTUAL GLASS AREA. ALL GLAZING SHALL BE DOUBLE PANE EXCEPT GARAGE.
5. PROVIDE FIREBLOCKING IN CONCEALED SPACES OF STUD WALLS & PARTITIONS, INCLUDING FURRED SPACES, AT STAIRS IN APPLICABLE, AT CEILING & FLOOR LEVELS & AT 10' INTERVALS BOTH VERTICAL & HORIZONTAL.
6. MAINTAIN 18" CLEAR FROM LIGHT TO COMBUSTIBLE MATERIALS AT WALK-IN CLOSETS.
7. GYP BOARD SHALL BE AS FOLLOWS:
   A. WALLS & CEILING
      FRAMING @ 16" OC - 1/2" GYP BOARD
      FRAMING @ 24" OC - 5/8" GYP BOARD
   B. ENCLOSED USABLE SPACE UNDER STAIRS SHALL BE 1/2" TYPE "X"
   C. GARAGE WALLS & CEILING U.O.N. - 5/8" TYPE "X" (HEAVY ALL POSTS & BEAMS.)
   D. PROVIDE WATER RESISTANT GYPSUM BOARD UNDER TUB SHOWER ENCLOSURE AT LEAST 3 FEET HIGH OR 3' ABOVE THE DRAIN INLET. (CC 807 AND 2512. WATERPROOF OR USE APPROVED BACKER BOARD UNDER TILE. ALL TILE SHALL BE INSTALLED PER THE TILE COUNCIL OF AMERICA STANDARDS.
   E. ALL INTERIOR WALLS & CEILINGS TO BE TAPED & TEXTURED, U.O.N. ALL OUTSIDE CORNERS TO BE ROUNDED TO APPROX. 1/4" RAD. W/ "BEADEX SOFTLINE" CORNERS.
   F. ALL GARAGE WALLS & CEILINGS TO BE TEXTURED, U.O.N.
8. ALL INSULATION MATERIAL SHALL HAVE A FLAME SPREAD RATING NOT TO EXCEED 25 AND A SMOKE DENSITY NOT TO EXCEED 450.
9. PROVIDE SEISMIC ANCHORAGE OF APPLIANCES PER CPC SECTION 304.1.
10. PROVIDE ADEQUATE VOLUME OF OUTSIDE COMBUSTION AIR PER CPC SECTIONS 701.2 (UNIT.3) AND 701.3) AND TO FAU ENCLOSURE (PER CRC 101.-101.3).
11. ALL AIR DUCTS PENETRATING SEPARATION WALL OR CEILING BETWEEN GARAGE AND LIVING AREA SHALL BE 24 GA.MIN. PER CRC 302.4 EXCE. 1.
12. ALL SMOKE DETECTORS SHALL BE 110V W/BATTERY BACK-UP.
13. COMPLY WITH ALL APPLICABLE REQUIREMENTS OF THE "RESIDENTIAL BUILDING SECURITY CODE, CHAPTER 41 (SECURITY PROVISION".
14. COMPLY WITH ALL REQUIREMENTS OF SANTA ROSA CITY ORDINANCE SEC.1-18.054. "ILLUMINATED ADDRESS NBOS."
15. WATER HEATERS SHALL BE SHALL BE PROVIDED WITH A PRESSURE BALANCED OR THERMOSTATIC MIXING VALVE LIMITING WATER TEMPERATURE TO 120 F.
16. WINDOWS PROVIDED AS ESCAPE OPENINGS SHALL HAVE A MINIMUM NET CLEAR OPENING OF 5.7 SQUARE FEET; MINIMUM NET CLEAR OPENING HEIGHT OF 24 INCHES, MINIMUM NET CLEAR OPENING WIDTH OF 20 INCHES; ALL WINDOWS NO MORE THAN 44 INCHES ABOVE THE FINISHED FLOOR; DIRECTLY TO A PUBLIC ALLEY, YARD OR EXIT CONDITION.
17. WATER HAMMER CONTROL SHALL BE PROVIDED AT CLOTHES WASHER & DISHWASHER PER CPC SEC 604.10.
18. WALLS, OR PORTIONS THEREOF, RETAINING EARTH AND ENCLOSING INTERIOR SPACES AND FLOORS BELOW GRADE SHALL BE WATER OR DAMP-PROOFED PER CBC APPENDIX CHAPTER 18.
19. EXTERIOR WALL COMPONENTS SHALL BE APPROVED FOR EXTERIOR USE.

DATE	2/03
DRAWN BY:	
CHECKED BY:	
REVISIONS:	DATE:
1	04-8-03
2	
3	
4	
5	
6	
7	
8	
9	
10	

NOTES

FARRELL · FABER & ASSOCIATES INC.
ARCHITECTURE · PLANNING
1022 Mendocino Avenue
Santa Rosa California 95401
TEL: 707.578.2811
FAX: 707.578.2848
www.farrellfaber.com

DESIGN FOR:

MTA CONSTRUCTION

SKYFARM SUBDIVISION, LOT 42
3171 SKYFARM DRIVE
SANTA ROSA, CALIFORNIA

JOB NO. 03037

SHEET

H:\3003\03037\AD\FBOLD.C3 4-8-2003 4:46 PM

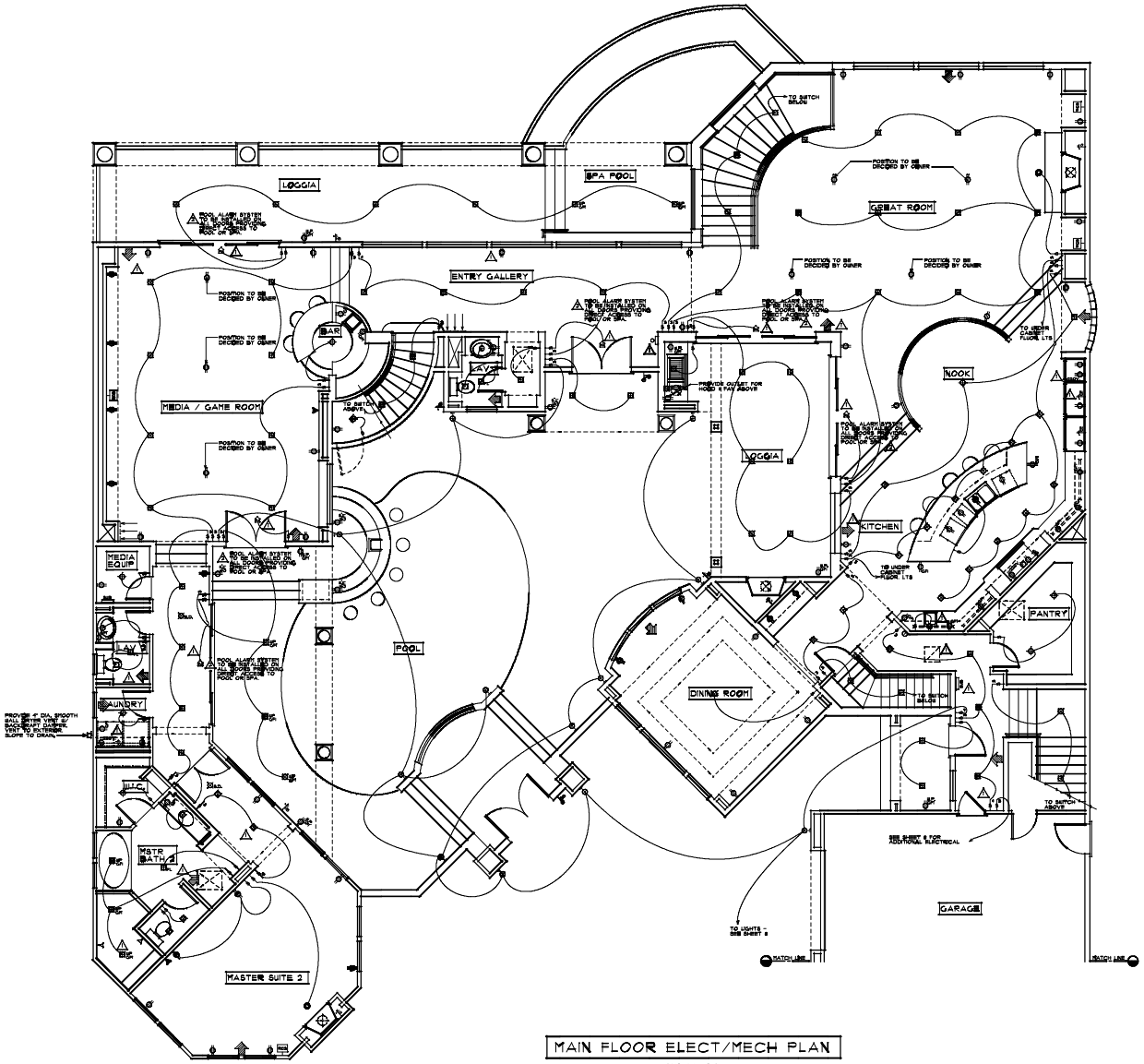

MAIN FLOOR ELECT/MECH PLAN

SCALE 1/4" = 1'-0"

ELECTRICAL SYMBOLS

NOT NECESSARILY ALL SYMBOLS ON THIS DRAWING.

- DUPLEX CONVENIENCE OUTLET
- 1/2 HOT DUPLEX CONV. OUTLET
- FULLY SWITCHED OUTLET
- DUPLEX CONV. OUTLET W/ GROUND FAULT INTERRUPTER
- WATERPROOF DUPLEX CONV. OUTLET W/ GROUND FAULT INTERRUPTER
- UNDER COUNTER OUTLET
- 220 VOLT OUTLET
- OUTLET ABOVE FOR GARAGE DOOR OPENER
- CEILING LIGHT FIXTURE
- RECESSED LIGHT (IC RATED)
- RECESSED FLUORESCENT LIGHT (40 LUMENS/WATT OR BETTER)
- WATERPROOF RECESSED LIGHT ON GROUND FAULT INTERRUPTER CIRCUIT W/ SUITABLE FOR DAMP LOCATIONS LABEL
- RECESSED AIMABLE SPOTLIGHT
- WALL MOUNTED LIGHT FIXTURE
- SPOTLIGHT
- FLUORESCENT LIGHT FIXTURE
- SINGLE POLE SWITCH
- THREE WAY SWITCH
- FOUR WAY SWITCH
- DIMMER SWITCH
- 120 VOLT STOCK DETECTOR W/ BATTERY BACKUP
- PHONE JACK
- RESIDENTIAL CABLE SYSTEM
- 2-TV AND 2-PHONE
- PUSH BUTTON FOR GARAGE DOOR OPENER
- PUSH BUTTON FOR DOOR BELL
- CHIMES
- SECURITY SYSTEM PANEL
- POOL ALARM SYSTEM
- EXHAUST FAN CAPABLE OF PROVIDING FIVE AIR EXCHANGES PER HOUR W/ BACKDRAFT DAMPER
- THERMOSTAT
- ILLUMINATED ADDRESS SIGN
- ELECTRIC SUB-PANEL
- CABLE/DATA
- ELECTRIC METER
- HOSE BIBB WITH NON-REMOVABLE BACKFLOW PREVENTION DEVICE
- JUNCTION BOX

NOTE: PROVIDE 2-20 AMP BRANCH CIRCUITS & KITCHEN, PANTRY, NOOK, LIVING ROOM PER CEC 210-11(c)(1), (2), & 210-52(b) 2001 EDITION.

LAUNDRY TO BE ON SEPARATE 20 AMP CIRCUIT; 20 AMP BRANCH CIRCUIT TO BE SEPARATE 20 AMP FIN. CIRCUIT.

LIGHT FIXTURES IN TUB OR SHOWER ENCLOSURES OR WITHIN 36" OF TUB OR SHOWER SHALL BE SUITABLE FOR DAMP LOCATIONS.

CLOTHES CLOSET LIGHT FIXTURES SHALL BE LISTED AND INSTALLED IN ACCORDANCE WITH THEIR LISTING.

ALL SMOKE DETECTORS SHALL BE HARD WIRED, SELF WIRED AND PROVIDED WITH BATTERY BACKUP. SMOKE DETECTORS IN BEDROOMS WILL SOUND ALARM.

RECEPTACLES FOR EACH BATH, LAVATORY ROOM, AND GARAGE TO BE ON SEPARATE 20 AMP CIRCUIT.

PROVIDE UFER 1 & 2 GANG RUD-RING @ ELECT. METER PER CALIFORNIA ELECTRICAL CODE.

ALL BRANCH CIRCUITS THAT SUPPLY 125-VOLT, SINGLE-PHASE 15 AND 20-AMPERE RECEPTACLE OUTLETS INSTALLED IN BEDROOMS SHALL BE PROTECTED BY AN ARC-FAULT CIRCUIT INTERRUPTER PER CEC SEC 210-12(a).

POOL ALARM SYSTEM SHALL COMPLY WITH CBC SEC 1211B. ALARM SYSTEM SHALL BE EQUIPPED W/ PANEL OR METER TO DEACTIVATE THE ALARM FOR A SINGLE CYCLE. SUCH PANEL OR METER SHALL BE LOCATED AT LEAST 54" ABOVE FLR. POOL ALARM SYSTEM TO BE INSTALLED ON ALL DOORS PROVIDING DIRECT ACCESS TO POOL OR SPA.

MECHANICAL SYMBOLS

NOT NECESSARILY ALL SYMBOLS ON THIS DRAWING.

- CEILING HEAT REGISTER
- FLOOR HEAT REGISTER
- HEAT REGISTER HIGH ON WALL
- RETURN AIR GRILL IN CEILING
- RETURN AIR GRILL IN WALL
- FUEL GAS STUB OUT
- HOSE BIBB WITH NON-REMOVABLE BACKFLOW PREVENTION DEVICE
- ICE MAKER STUB OUT
- GAS METER
- DRYER VENT (TERMINATION OF VENT SHALL BE LOCATED AT LEAST 3' FROM SECTION 504 AND 506 OF THE U.M.C.)
- COMBUSTION AIR VENT 6" X 14"
- RISER IN WALL

NOTE: ALL DUCTS (SUPPLY & RETURN) SHALL BE CLOSED SYSTEMS WITHOUT THE USE OF BUILDING CAVITIES. ALL DUCT CONNECTIONS SHALL BE INSTALLED WITH MECHANICAL FASTENERS.

PROVIDE WEATHERSTRIP OR SEAL AT THE ATTIC ACCESS PANEL.

PROVIDE 4" DIA. SMOOTH BACK DRAFT DAMPER VENT TO OUTSIDE. SLOPE TO DRAIN.

FARRELL · FABER & ASSOCIATES INC.
ARCHITECTURE · PLANNING
1022 Mendocino Avenue
Santa Rosa California 95401
TEL: 707.578.2811
FAX: 707.578.2846
www.farrellfaber.com

DATE 2/03

DRAWN BY:
CHECKED BY:

REVISIONS:	DATE:
1	04-8-03
2	
3	
4	
5	
6	

NOTES

DESIGN FOR:

MTA CONSTRUCTION

SKYFARM SUBDIVISION, LOT 42
3171 SKYFARM DRIVE
SANTA ROSA, CALIFORNIA

JOB NO. 03037

SHEET 7

H:\3000\03037\ADAFB01.DCE 4-8-2003 4:46 PM

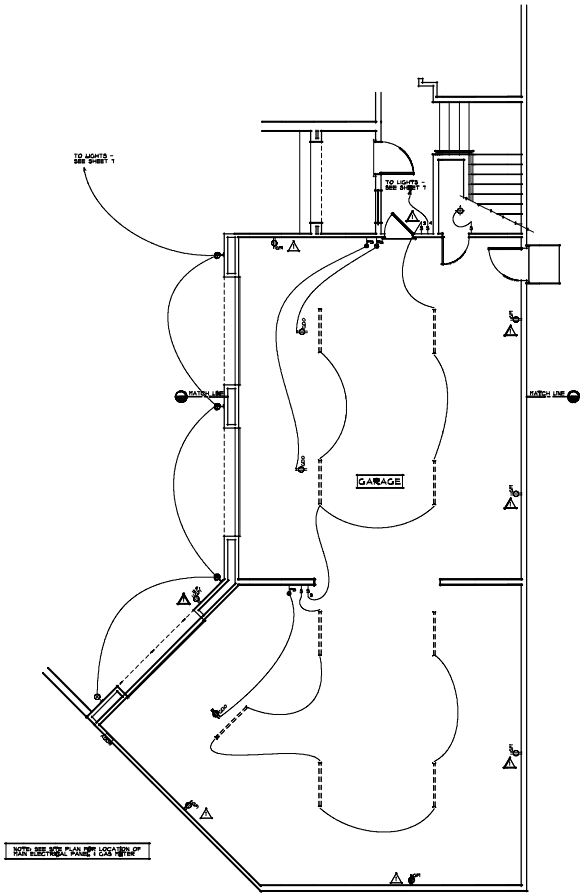

MAIN FLOOR - GARAGE ELECT/MECH PLAN

SCALE 1/4" = 1'-0"

* **ELECTRICAL SYMBOLS**

NOT NECESSARILY ALL SYMBOLS ON THIS DRAWING.

- DUPLEX CONVENIENCE OUTLET
- 1/2 HOT DUPLEX CONV. OUTLET
- FULLY SWITCHED OUTLET
- DUPLEX CONV. OUTLET W/ GROUND FAULT INTERRUPTER
- WATERPROOF DUPLEX CONV. OUTLET W/ GROUND FAULT INTERRUPTOR
- UNDER COUNTER OUTLET
- 230 VOLT OUTLET
- OUTLET ABOVE FOR GARAGE DOOR OPENER
- CEILING LIGHT FIXTURE
- RECESSED LIGHT (NC RATED)
- RECESSED FLUORESCENT LIGHT (40 LUMENS/WATT OR BETTER)
- WATERPROOF RECESSED LIGHT ON GROUND FAULT INTERRUPTOR CIRCUIT W/ "SUITABLE FOR DAMP LOCATIONS" LABEL
- RECESSED ADJUSTABLE SPOTLIGHT
- WALL MOUNTED LIGHT FIXTURE
- SPOTLIGHT
- FLUORESCENT LIGHT FIXTURE
- SINGLE POLE SWITCH
- THREE WAY SWITCH
- FOUR WAY SWITCH
- DIMMER SWITCH
- 50 VOLT SMOKE DETECTOR W/ BATTERY BACK-UP
- PHONE JACK
- RESIDENTIAL CABLE SYSTEM
- 2-TV AND 2-PHONE
- PUSH BUTTON FOR GARAGE DOOR OPENER
- PUSH BUTTON FOR DOOR BELL
- CHIMES
- SECURITY SYSTEM PANEL
- EXHAUST FAN CAPABLE OF PROVIDING FIVE (5) AIR EXCHANGES PER HOUR W/ BACKDRAFT DAMPER
- THERMOSTAT
- ILLUMINATED ADDRESS SIGN
- ELECTRIC SUB-PANEL
- CABLE/DATA
- ELECTRIC METER
- HOSE BIBB WITH NON-REMOVABLE BACKFLOW PREVENTION DEVICE
- JUNCTION BOX

NOTE: PROVIDE 2-20 AMP BRANCH CIRCUITS. * KITCHEN, PANTRY, NOOK, & DINING ROOM PER CBC 220-4(b) (1), (2) & 210-11(c) 2001 EDITION.

LAUNDRY TO BE ON SEPARATE 20 AMP CIRCUIT. 220V ELECTRIC DRYER TO BE SEPARATE 30 AMP 4W CIRCUIT.

LIGHT FIXTURES IN TUB OR SHOWER ENCLOSURES OR OTHER WET/DAMP LOCATIONS SHALL BE SUITABLE FOR DAMP LOCATIONS.

CLOTHES CLOSET LIGHT FIXTURES SHALL BE CENTER AND REST LIGHT IN ACCORDANCE WITH THEIR LISTING.

ALL SMOKE DETECTORS SHALL BE WIRED SUCH THAT WHEN ANY DETECTOR IN ACTIVATED, SMOKE DETECTORS IN BEDROOMS WILL SOUND ALARM.

RECEPTACLES IN KITCHEN, BATHS, 20 AMP NOOK, AND GARAGE TO BE ON SEPARATE 20 AMP CIRCUIT.

PROVIDE (FOR) 4 2 GANG MUD-RING. * ELECT. METER PER CALIFORNIA ELECTRICAL CODE.

ALL BRANCH CIRCUITS THAT SUPPLY 125-VOLT, SINGLE-PHASE, 15- AND 20-AMPERE RECEPTACLE OUTLETS INSTALLED IN BEDROOMS SHALL BE PROTECTED BY AN ARC-FAULT CIRCUIT INTERRUPTER(S) PER CBC SEC. 210-12(b).

MECHANICAL SYMBOLS

NOT NECESSARILY ALL SYMBOLS ON THIS DRAWING.

- CEILING HEAT REGISTER
- FLOOR HEAT REGISTER
- HEAT REGISTER HIGH ON WALL
- RETURN AIR GRILL IN CEILING
- RETURN AIR GRILL IN WALL
- FUEL GAS STUB OUT
- HOSE BIBB WITH NON-REMOVABLE BACKFLOW PREVENTION DEVICE
- ICE MAKER STUB OUT
- GAS METER
- DRYER VENT (TERMINATION OF VENT. SHALL BE LIMITED TO THE USE OF FIRE SECTION 504 AND 505 OF THE U.M.C.)
- COMBUSTION AIR VENT 6" X 14"
- RISER IN WALL

NOTE: ALL DUCTS (SEND & RETURN) SHALL BE CLOSED SYSTEMS WITHOUT THE USE OF BUILDING CAVITIES.

ALL DUCT CONNECTIONS SHALL BE INSTALLED WITH MECHANICAL FASTENERS.

PROVIDE WEATHERSTRIP OR SEAL AT THE ATTIC ACCESS PANEL.

DATE 2/03

DRAWN BY:
CHECKED BY:

REVISIONS:	DATE:
	01-12-05

NOTES

FARRELL·FABER & ASSOCIATES INC.
ARCHITECTURE · PLANNING
1899 Mendocino Avenue
Santa Rosa California 95401
TEL: 707.579.3811
FAX: 707.579.2466
www.farrellfaber.com

MTA CONSTRUCTION

SKYFARM SUBDIVISION, LOT 42
3777 SKYFARM DRIVE
SANTA ROSA, CALIFORNIA

JOB NO 03037

DESIGN FOR:

SHEET 8

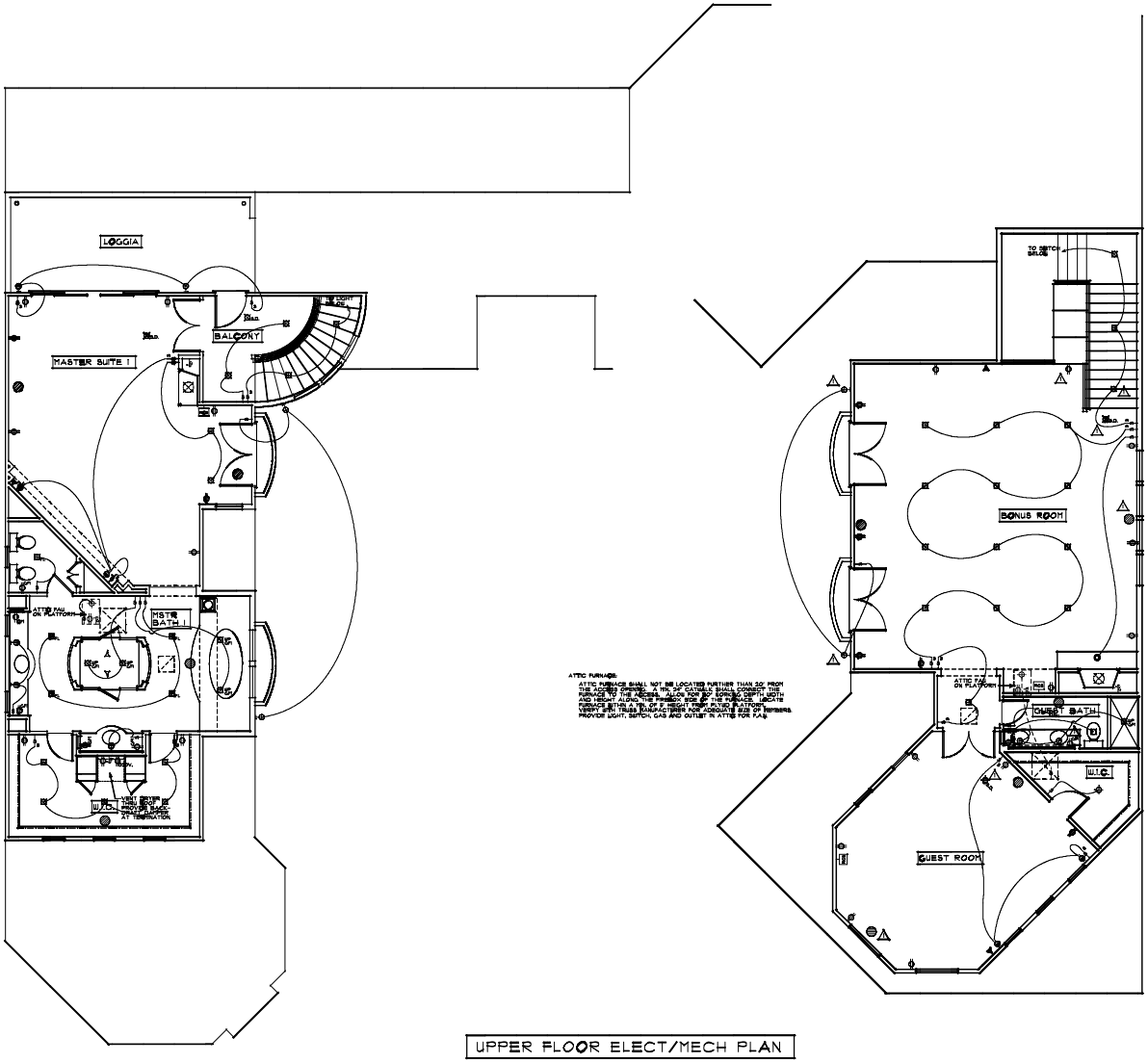

UPPER FLOOR ELECT/MECH PLAN

SCALE 1/4" = 1'-0"

* **ELECTRICAL SYMBOLS**

NOT NECESSARILY ALL SYMBOLS ON THIS DRAWING.

- DUPLEX CONVENIENCE OUTLET
- 1/2 HOT DUPLEX CONV. OUTLET
- FULLY SWITCHED OUTLET
- DUPLEX CONV. OUTLET W/ GROUND FAULT INTERRUPTOR
- WATERPROOF DUPLEX CONV. OUTLET W/ GROUND FAULT INTERRUPTOR
- UNDER COUNTER OUTLET
- 220 VOLT OUTLET
- OUTLET ABOVE FOR GARAGE DOOR OPENER
- CEILING LIGHT FIXTURE
- RECESSED LIGHT (IC RATED)
- RECESSED FLUORESCENT LIGHT (40 LUMENS/WATT OR BETTER)
- WATERPROOF RECESSED LIGHT ON SEPARATE 20 AMP CIRCUIT (CIRCUIT W/ SUITABLE FOR DAMP LOCATIONS LABEL)
- RECESSED ADJUSTABLE SPOTLIGHT
- WALL MOUNTED LIGHT FIXTURE
- SPOTLIGHT
- FLUORESCENT LIGHT FIXTURE
- SINGLE POLE SWITCH
- THREE WAY SWITCH
- FOUR WAY SWITCH
- DIMMER SWITCH
- 120 VOLT SMOKE DETECTOR W/ BATTERY BACK-UP
- PHONE JACK
- RESIDENTIAL CABLE SYSTEM
- 2-TV AND 2-PHONE
- PUSH BUTTON FOR GARAGE DOOR OPENER
- PUSH BUTTON FOR DOOR BELL
- CHIMES
- SECURITY SYSTEM PANEL
- POOL ALARM SYSTEM
- EXHAUST FAN (CAPABLE OF PROVIDING FIVE EXCHANGES PER HOUR W/ BACKDRAFT DAMPER
- THERMOSTAT
- ILLUMINATED ADDRESS SIGN
- ELECTRIC SUB-PANEL
- CABLE/DATA
- ELECTRIC METER
- HOSE BIBB WITH NON-REMOVABLE BACKFLOW PREVENTION DEVICE
- JUNCTION BOX

NOTE: PROVIDE 2-20 AMP BRANCH CIRCUITS IN KITCHEN, PANTRY, & POOL & DINING ROOM PER CEC 220-4(b) (5), (6), & 220-4(d) 2001 EDITION.

LAUNDRY TO BE ON SEPARATE 20 AMP CIRCUIT. 220V ELECTRIC DRYER TO BE SEPARATE 30 AMP 7IN CIRCUIT.

LIGHT FIXTURES IN TUB OR SHOWERS ENCLOSURES OR WITHIN 3FT (DAMP LOCATIONS) SHALL BE SUITABLE FOR DAMP LOCATIONS.

CLOTHES CLOSET LIGHT FIXTURES SHALL BE TESTED AND INSTALLED IN ACCORDANCE WITH THEIR LISTING.

ALL SMOKE DETECTORS SHALL BE WIRED SUCH THAT WHEN ANY DETECTOR IS ACTIVATED, SMOKE DETECTORS IN BEDROOMS WILL SOUND ALARM.

△ POOL ALARM SYSTEM SHALL COMPLY WITH CBC SEC 421.5 ALARM SYSTEM SHALL BE EQUIPPED W/ PANEL OR SWITCH TO DEACTIVATE THE ALARM FOR A SINGLE OPENING SUCH ENTRY SWITCH SHALL BE LOCATED AT LEAST 54" ABOVE THE FLR. ALARM SHALL BE INSTALLED ON ALL DOORS PROVIDING DIRECT ACCESS TO POOL OR SPA.

MECHANICAL SYMBOLS

NOT NECESSARILY ALL SYMBOLS ON THIS DRAWING.

- CEILING HEAT REGISTER
- FLOOR HEAT REGISTER
- HEAT REGISTER HIGH ON WALL
- RETURN AIR GRILL IN CEILING
- RETURN AIR GRILL IN WALL
- FUEL GAS STUB OUT
- HOSE BIBB WITH NON-REMOVABLE BACKFLOW PREVENTION DEVICE
- ICE MAKER STUB OUT
- GAS METER
- DRYER VENT (TERMINATION OF VENT SHALL BE 3FT FROM ANY OPENING INTO BUILDING, SEPARATE 12FT AND 3FT FROM PROPERTY LINE C.M.C.)
- COMBUSTION AIR VENT 6" X 14"
- RISER IN WALL

NOTE: ALL DUCTS (SUPPLY & RETURNS) SHALL BE CLOSED SYSTEMS WITHOUT THE USE OF BUILDING CAVITIES.

ALL DUCT CONNECTIONS SHALL BE INSTALLED WITH NON-PRICK FASTENERS.

PROVIDE WEATHERSTRIP OR SEAL AT THE ATTIC ACCESS PANEL.

FARRELL·FABER & ASSOCIATES INC.
ARCHITECTURE · PLANNING
1099 Mendocino Avenue
Santa Rosa California 95401
TEL: 707.578.2811
FAX: 707.578.2868
www.farrellfaber.com

DATE 2/03

DRAWN BY:
CHECKED BY:

REVISIONS:	DATE:
	01-2-03

NOTES

DESIGN FOR:

MTA CONSTRUCTION

SKYFARM SUBDIVISION, LOT 42
3171 SKYFARM DRIVE
SANTA ROSA, CALIFORNIA

JOB NO 03037

SHEET 9

H:\2003\03037\A\ARTSOLID\ 4-8-2003 4:26 PM

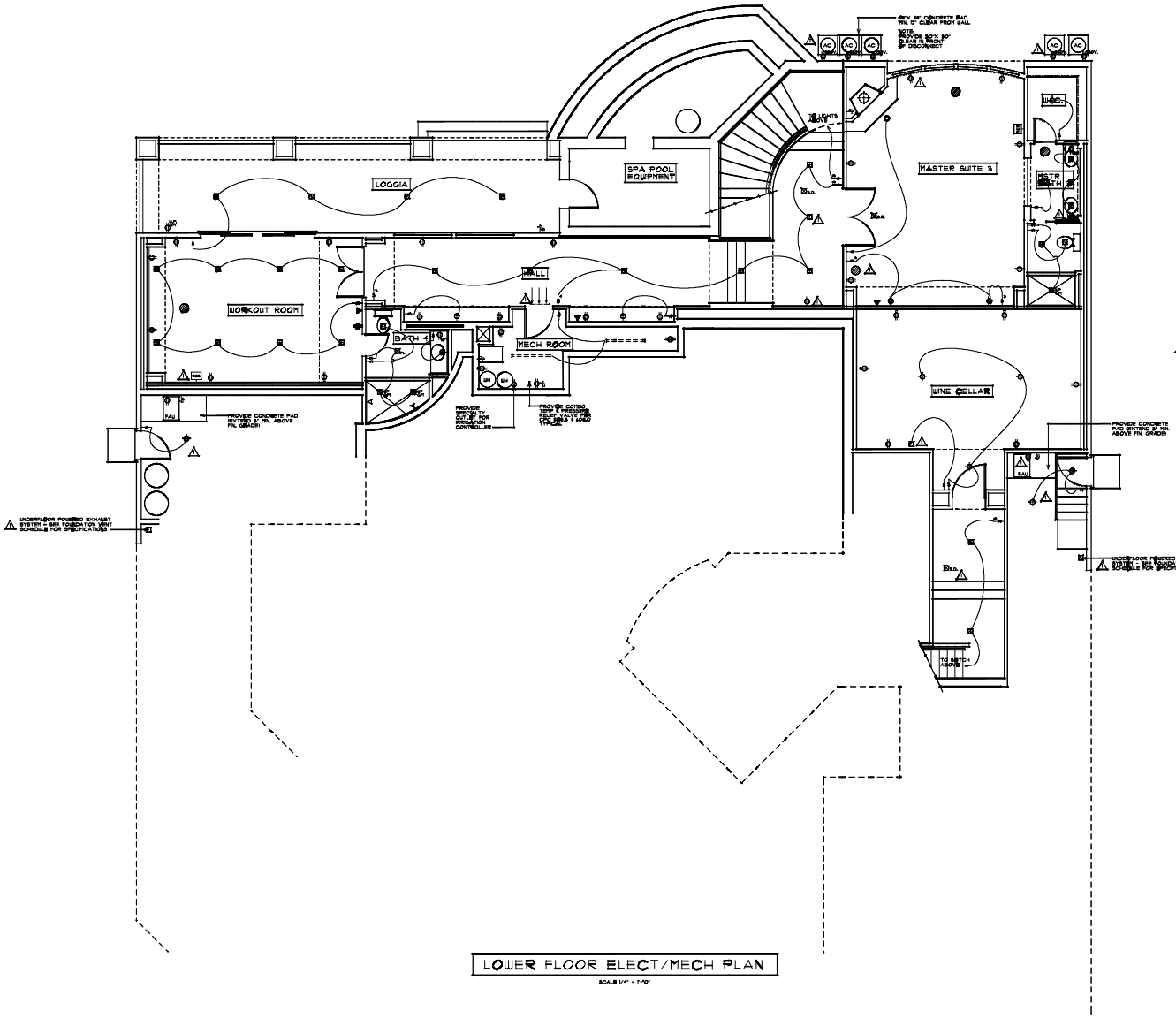

LOWER FLOOR ELECT/MECH PLAN

SCALE 1/4" = 1'-0"

ELECTRICAL SYMBOLS

NOT NECESSARILY ALL SYMBOLS ON THIS DRAWING.

- DUPLEX CONVENIENCE OUTLET
- 1/2 HOT DUPLEX CONV. OUTLET
- FULLY SWITCHED OUTLET
- DUPLEX CONV. OUTLET W/ GROUND FAULT INTERRUPTER
- WATERPROOF DUPLEX CONV. OUTLET W/ GROUND FAULT INTERRUPTOR
- UNDER COUNTER OUTLET
- 220 VOLT OUTLET
- OUTLET ABOVE FOR GARAGE DOOR OPENER
- CEILING LIGHT FIXTURE
- RECESSED LIGHT (IC RATED)
- RECESSED FLUORESCENT LIGHT (40 LUMENS/WATT OR BETTER)
- WATERPROOF RECESSED LIGHT ON SEPARATE 20 AMP CONVENIENCE CIRCUIT W/ GFI (SUITABLE FOR DAMP LOCATIONS) LABEL
- RECESSED AIMABLE SPOTLIGHT
- WALL MOUNTED LIGHT FIXTURE
- SPOTLIGHT
- FLUORESCENT LIGHT FIXTURE
- SINGLE POLE SWITCH
- THREE WAY SWITCH
- FOUR WAY SWITCH
- DIMMER SWITCH
- 120 VOLT SMOKE DETECTOR W/ BATTERY BACK-UP
- PHONE JACK
- RESIDENTIAL CABLE SYSTEM
- 2-TV AND 2-PHONE
- PUSH BUTTON FOR GARAGE DOOR OPENER
- PUSH BUTTON FOR DOOR BELL
- CHIMES
- SECURITY SYSTEM PANEL
- POOL ALARM SYSTEM
- EXHAUST FAN (NOTABLE OR PROVIDING FIVE AIR CHANGES PER HOUR) W/ BACKDRAFT DAMPER
- THERMOSTAT
- ILLUMINATED ADDRESS SIGN
- ELECTRIC SUB-PANEL
- CABLE/DATA
- ELECTRIC METER
- HOSE BIBB WITH NON-REMOVABLE BACKFLOW PREVENTION DEVICE
- JUNCTION BOX

NOTE: PROVIDE 2-20 AMP BRANCH CIRCUITS IN KITCHEN, PANTRY, POOL & DINING ROOM PER CEC 220-4(b) (5), (6), & 220-4(c) 2001 EDITION.

LAUNDRY TO BE ON SEPARATE 20 AMP CIRCUIT. 220V ELECTRIC DRYER TO BE SEPARATE 30 AMP FIN CIRCUIT.

LIGHT FIXTURES IN TUB OR SHOWER ENCLOSURES OR AREAS BE COMP. LOCATIONS SHALL BE SUITABLE FOR DAMP LOCATIONS.

CLOTHES CLOSET LIGHT FIXTURES SHALL BE LISTED AND INSTALLED IN ACCORDANCE WITH THEIR LISTING.

ALL SMOKE DETECTORS SHALL BE WIRED SUCH THAT WHEN ONE DETECTOR IS ACTIVATED, SMOKE DETECTORS IN BEDROOMS WILL SOUND ALARM.

POOL ALARM SYSTEM SHALL COMPLY WITH CBC SEC 421.5 ALARM SYSTEMS SHALL BE EQUIPPED W/ PANEL OR SWITCH TO DEACTIVATE THE ALARM FOR A SINGLE OPENING. SUCH SWITCH SHALL BE LOCATED AT LEAST 54" ABOVE FIN FLR. POOL ALARM SYSTEM TO BE INSTALLED ON ALL DOORS PROVIDING DIRECT ACCESS TO POOL OR SPA.

MECHANICAL SYMBOLS

NOT NECESSARILY ALL SYMBOLS ON THIS DRAWING.

- CEILING HEAT REGISTER
- FLOOR HEAT REGISTER
- HEAT REGISTER HIGH ON WALL
- RETURN AIR GRILL IN CEILING
- RETURN AIR GRILL IN WALL
- FUEL GAS STUB OUT
- HOSE BIBB WITH NON-REMOVABLE BACKFLOW PREVENTION DEVICE
- ICE MAKER STUB OUT
- GAS METER
- DRYER VENT (TERMINATION OF VENT SHALL BE 3 FEET OR MORE FROM ANY OPENING INTO THE BUILDING PER U.M.C.)
- COMBUSTION AIR VENT 6" X 14"
- RISER IN WALL

NOTE: ALL DUCTS (SEND & RETURNS) SHALL BE CLOSED SYSTEMS WITHOUT THE USE OF BUILDING CAVITIES.

ALL DUCT CONNECTIONS SHALL BE INSTALLED WITH MECHANICAL FASTENERS.

PROVIDE WEATHERSTRIP OR SEAL AT THE ATTIC ACCESS PANEL.

FARRELL·FABER & ASSOCIATES INC.
ARCHITECTURE · PLANNING
1099 Mendocino Avenue
Santa Rosa California 95401
TEL: 707.578.2811
FAX: 707.578.2868
www.farrellfaber.com

DATE 2/03

DRAWN BY:
CHECKED BY:

REVISIONS:	DATE:
	01-2-03

NOTES

DESIGN FOR:

MTA CONSTRUCTION
SKYFARM SUBDIVISION, LOT 42
3171 SKYFARM DRIVE
SANTA ROSA, CALIFORNIA

JOB NO 03037

SHEET 10

ATTIC VENT SCHEDULE

VENTS PROVIDED
O' HAGIN TILE VENTS
(6.41 SQ.FT. FREE FLOW AREA)
3-2" DIA SCREENED VENTED EAVE BLOCK
(.06 SQ.FT. FREE FLOW AREA)
CONTINUOUS SOFFIT SCREEN VENT MESH
(0.21 SQ.FT. PER LINEAL FOOT - FREE FLOW AREA)

ATTIC AREA 'A' = 514 SQ.FT. X 1/300
= 1.71 SQ.FT. REQ'D VENT AREA
-USE (2) O' HAGIN TILE VENTS = 1.34 SQ.FT.
-USE (14) VENTED EAVE BLOCKS W/ 3-2" DIA SCREENED BIRDHOLE VENTS EACH BLOCK = 0.91 SQ.FT.
TOTAL VENT AREA PROVIDED = 2.25 SQ.FT.
ALSO PROVIDE MINIMUM
(4 FT) CONTINUOUS SOFFIT VENT = 1.14 SQ.FT.

ATTIC AREA 'B' = 1257 SQ.FT. X 1/300
= 4.12 SQ.FT. REQ'D VENT AREA
-USE (4) O' HAGIN TILE VENTS = 2.68 SQ.FT.
-USE (32) VENTED EAVE BLOCKS W/ 3-2" DIA SCREENED BIRDHOLE VENTS EACH BLOCK = 2.08 SQ.FT.
TOTAL VENT AREA PROVIDED = 4.76 SQ.FT.
ALSO PROVIDE MINIMUM
(15 FT) CONTINUOUS SOFFIT VENT = 4.35 SQ.FT.

ATTIC AREA 'C' = 761 SQ.FT. X 1/300
= 2.54 SQ.FT. REQ'D VENT AREA
-USE (2) O' HAGIN TILE VENTS = 1.34 SQ.FT.
-USE (30) VENTED EAVE BLOCKS W/ 3-2" DIA SCREENED BIRDHOLE VENTS EACH BLOCK = 1.30 SQ.FT.
TOTAL VENT AREA PROVIDED = 2.64 SQ.FT.
ALSO PROVIDE MINIMUM
(9 FT) CONTINUOUS SOFFIT VENT = 2.61 SQ.FT.

ATTIC AREA 'D' = 2144 SQ.FT. X 1/300
= 7.15 SQ.FT. REQ'D VENT AREA
-USE (4) O' HAGIN TILE VENTS = 4.02 SQ.FT.
-USE (85) VENTED EAVE BLOCKS W/ 3-2" DIA SCREENED BIRDHOLE VENTS EACH BLOCK = 3.57 SQ.FT.
TOTAL VENT AREA PROVIDED = 7.59 SQ.FT.
ALSO PROVIDE MINIMUM
(25 FT) CONTINUOUS SOFFIT VENT = 7.25 SQ.FT.

ATTIC AREA 'E' = 285 SQ.FT. X 1/300
= .95 SQ.FT. REQ'D VENT AREA
-USE (1) O' HAGIN TILE VENTS = 0.67 SQ.FT.
-USE (8) VENTED EAVE BLOCKS W/ 3-2" DIA SCREENED BIRDHOLE VENTS EACH BLOCK = 0.52 SQ.FT.
TOTAL VENT AREA PROVIDED = 1.19 SQ.FT.
ALSO PROVIDE MINIMUM
(4 FT) CONTINUOUS SOFFIT VENT = 1.14 SQ.FT.

ATTIC AREA 'F' = 1642 SQ.FT. X 1/300
= 5.47 SQ.FT. REQ'D VENT AREA
-USE (4) O' HAGIN TILE VENTS = 2.68 SQ.FT.
-USE (43) VENTED EAVE BLOCKS W/ 3-2" DIA SCREENED BIRDHOLE VENTS EACH BLOCK = 2.80 SQ.FT.
TOTAL VENT AREA PROVIDED = 5.48 SQ.FT.
ALSO PROVIDE MINIMUM
(14 FT) CONTINUOUS SOFFIT VENT = 5.51 SQ.FT.

ATTIC AREA 'G' = 396 SQ.FT. X 1/300
= 1.32 SQ.FT. REQ'D VENT AREA
-USE (1) O' HAGIN TILE VENTS = 0.67 SQ.FT.
-USE (11) VENTED EAVE BLOCKS W/ 3-2" DIA SCREENED BIRDHOLE VENTS EACH BLOCK = 0.72 SQ.FT.
TOTAL VENT AREA PROVIDED = 1.39 SQ.FT.
ALSO PROVIDE MINIMUM
(5 FT) CONTINUOUS SOFFIT VENT = 1.45 SQ.FT.

NOTE: "V" MODELS ARE LISTED IN THE SILVER TECHNICAL CATALOG OF SILVER METAL PRODUCTS INC. "FV" AND "SHFV" MODELS ARE LISTED IN THE FILTER-VENT CATALOG AIR VENT INC. V-300 & V-400T MODELS ARE LISTED IN THE COR-A-VENT CATALOG AIR VENT INC. O' HAGIN MODELS ARE LISTED IN THE O' HAGIN'S INC. CLOAKED VENT TILE CATALOG.

NOTE: FOR "HIGH" AND "LOW" VENT DISTRIBUTION (1/300), PLACEMENT OF "HIGH" VENTS SHALL BE A MIN. 36" ABOVE THE "LOW" VENTING. DISTRIBUTE "LOW" VENTING EVENLY THROUGHOUT ROOF EAVE LINE. DISTRIBUTE "HIGH" VENTS THROUGHOUT REAR & SIDE ELEVATIONS. MINIMIZE FRONT ELEVATION PLACEMENT.

FOUNDATION VENT SCHEDULE

FOUNDATION AREA 'A' 1235 SQ.FT.

△1 PROVIDE A POWERED EXHAUST FAN: FROM FANTECH, MODEL FR150 CONTROLLED BY A HUMIDISTAT FROM HONEYWELL MODEL HM1000 UNDER AREA 'A'. SIZE OF FAN CAPABLE OF VENTING 1235 SQ. FT./MIN. SEE ELECTRICAL PLAN FOR LOCATION.

FOUNDATION AREA 'B' 1001 SQ.FT.

△1 PROVIDE A POWERED EXHAUST FAN: FROM FANTECH, MODEL FR150 CONTROLLED BY A HUMIDISTAT FROM HONEYWELL MODEL HM1000 UNDER AREA 'B'. SIZE OF FAN CAPABLE OF VENTING 1001 SQ. FT./MIN. SEE ELECTRICAL PLAN FOR LOCATION.

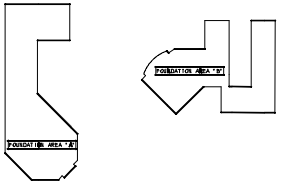

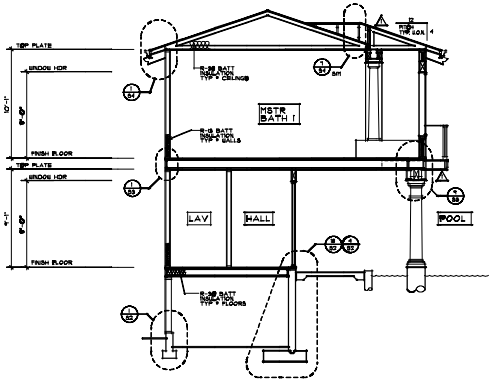

SECTION A-A
SCALE: 1/4" = 1'-0"

GLASS BLOCK NOTES

1. INTERIOR GLASS BLOCK SHALL NOT EXCEED 250 SQ.FT. OF UNSUPPORTED AREA NOR 25' IN ANY DIRECTION.
2. PROVIDE 1/2" EXPANSION JOINTS AT THE TOP AND SIDES. EXPANSION JOINTS SHALL BE ENTIRELY FREE OF MORTAR AND SHALL BE FILLED WITH RESILIENT MATERIAL.
3. GLASS BLOCK SHALL BE LAID IN TYPE "N" MORTAR. VERTICAL AND HORIZONTAL MORTAR JOINTS SHALL BE AT LEAST 1/4" AND NOT MORE THAN 3/4" THICK. ALL JOINTS SHALL BE COMPLETELY FILLED WITH MORTAR.
4. GLASS BLOCK REINFORCING SHALL BE PLACED IN EACH HORIZONTAL BED JOINT AND SHALL EXTEND FROM END TO END PANEL. REINFORCEMENT SHALL CONSIST OF NOT LESS THAN TWO PARALLEL #14 GAUGE GALVANIZED STEEL WIRES SPACED 2" APART AND HAVING WELDED THERETO #14 GAUGE CROSS WIRES APART AT NOT MORE THAN 16".
5. PROVIDE 1"x4" SLOT 20 GAUGE GALVANIZED STEEL PANEL ANCHORS LOCATED AT THE END OF EACH BED JOINT TO THE ADJACENT WALL OR POST. PANEL ANCHORS SHALL HAVE ELONGATED HOLES AND SHALL EXTEND 4" MINIMUM INTO EACH BED JOINT. EACH ANCHOR SHALL ATTACH TO THE ADJACENT WALL OR POST WITH 4 - #8 X 1 1/2" GALVANIZED SCREW.
6. PROVIDE DOUBLE FLOOR JOISTS UNDER ALL PORTIONS OF GLASS BLOCK PANEL. PROVIDE 2 X BLOCKING BETWEEN ADJACENT DOUBLE JOISTS DIRECTLY UNDER GLASS BLOCK PANEL.

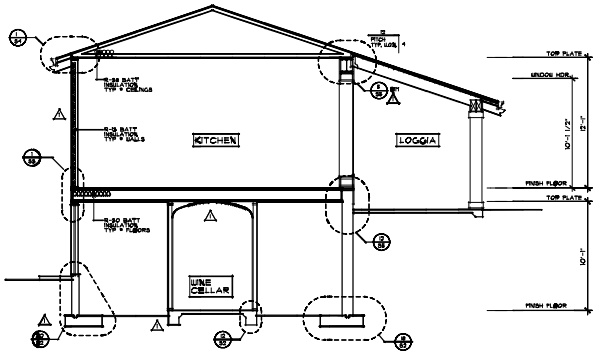

SECTION C-C
SCALE: 1/4" = 1'-0"

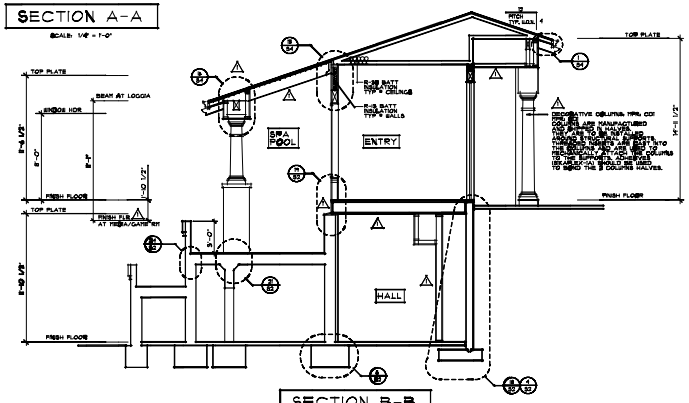

SECTION B-B
SCALE: 1/4" = 1'-0"

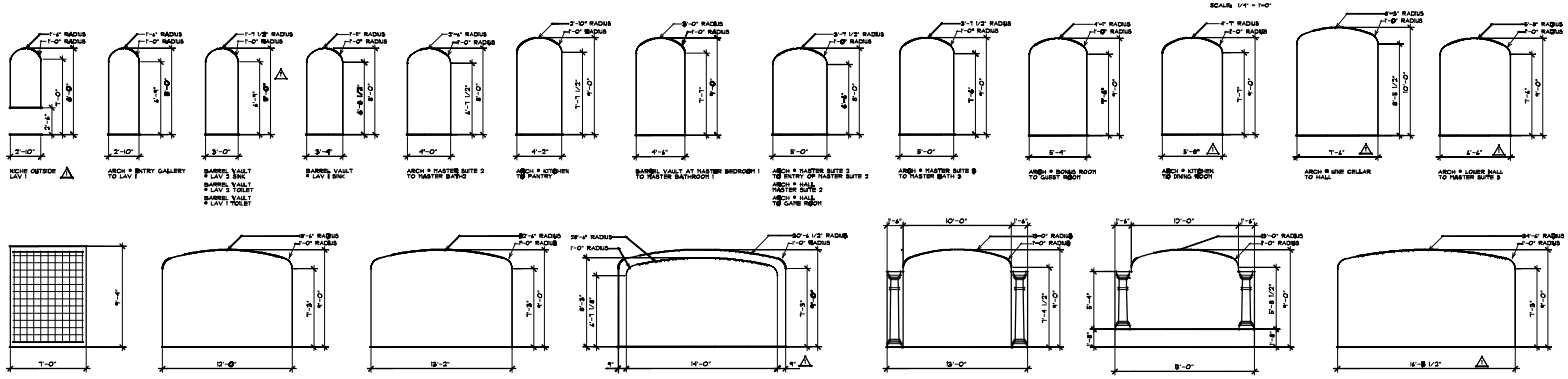

INTERIOR ELEVATIONS
SCALE: 1/4" = 1'-0"

FARRELL·FABER & ASSOCIATES INC.
ARCHITECTURE · PLANNING
1022 Mendocino Avenue
Santa Rosa California 95401
TEL: 707.579.2811
FAX: 707.579.2848
www.farrellfaber.com

DATE: 2/03
DRAWN BY:
CHECKED BY:
REVISIONS: DATE:
01-2-09

NOTES

JOB NO: 03037

SHEET: 11

DESIGN FOR:

MTA CONSTRUCTION
SKYFARM SUBDIVISION, LOT 42
3171 SKYFARM DRIVE
SANTA ROSA, CALIFORNIA

H:\2003\03037\DRAWINGS\CE 4-8-2003 4:26 PM

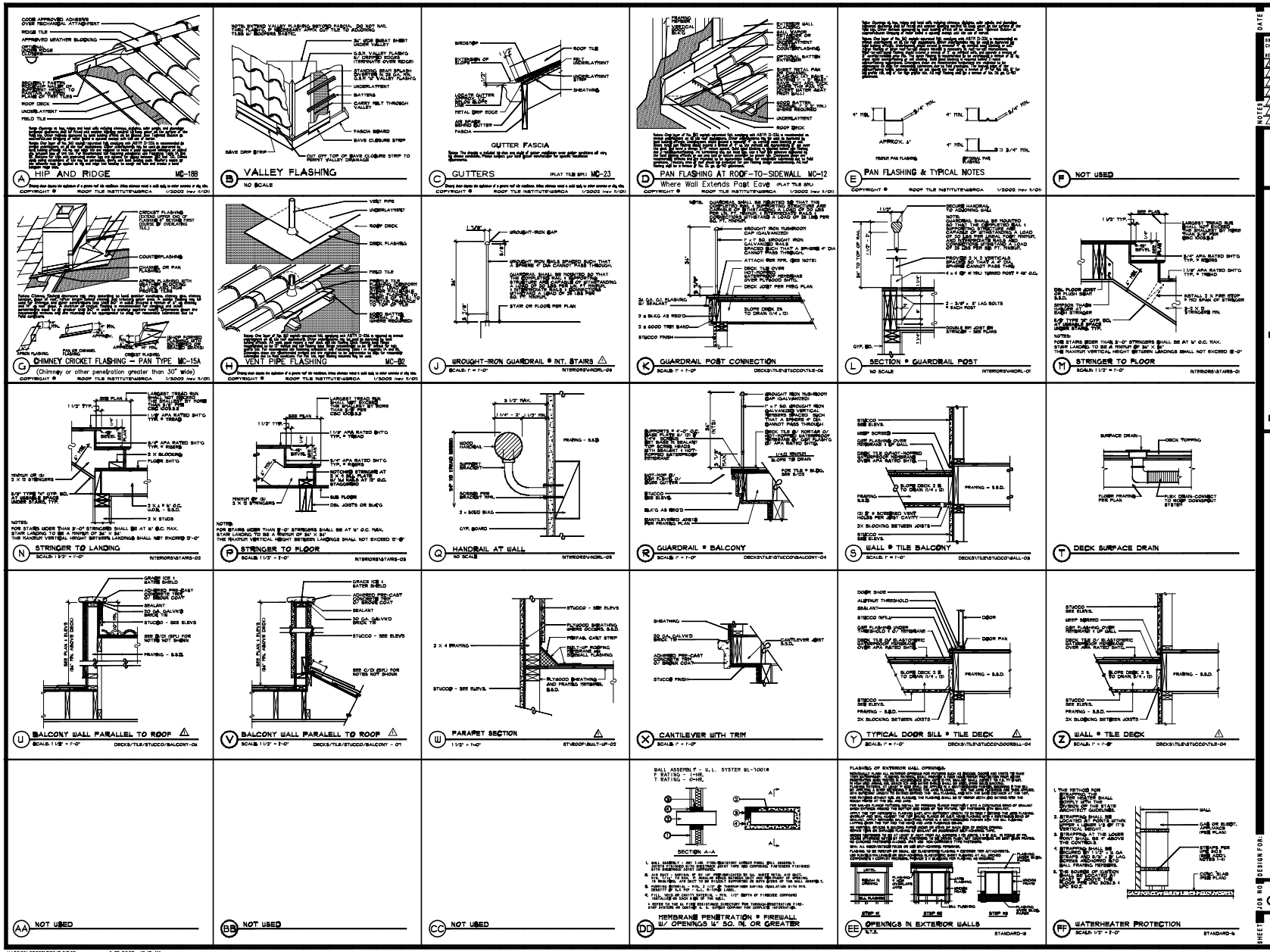

DATE 2/03

DRAWN BY:
CHECKED BY:

NOTES	REVISION#:	DATE:
1		04-02-03
2		01-26-03
3		
4		
5		
6		

FARRELL-FABER & ASSOCIATES INC.
Architecture • Planning
1023 Mendocino Avenue
Santa Rosa, California 95401
TEL: 707.579.2811
FAX: 707.579.2846
www.farrellfaber.com

MTA CONSTRUCTION

SKYFARM SUBDIVISION, LOT 42
SANTA ROSA, CALIFORNIA

JOB NO 03037

SHEET D2

H:\2003\03037\DETAIL5.DCS 4-25-2003 10:12 AM